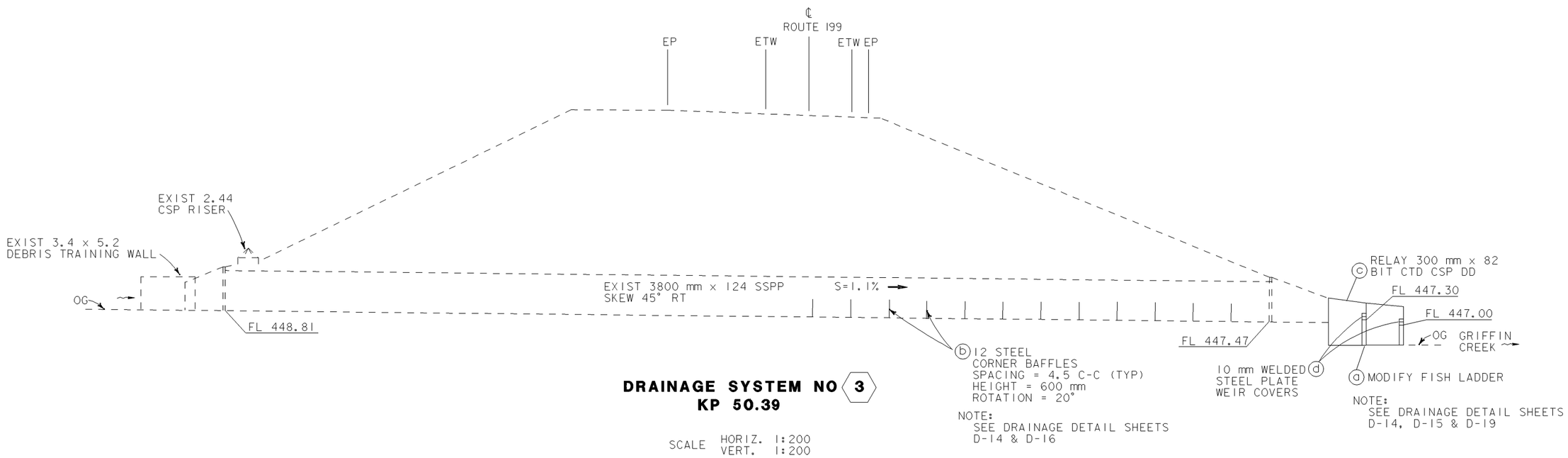

DRAINAGE SYSTEM NO 3
KP 50.39

SCALE HORIZ. 1:200
VERT. 1:200

DRAINAGE PROFILE

NO SCALE

D-7

ALL DIMENSIONS ARE IN METERS UNLESS OTHERWISE SHOWN.

FOR REDUCED PLANS ORIGINAL SCALE IS IN MILLIMETERS 0 20 40 60 80

USERNAME => $USER
DGN FILE => $REQUEST

CU 03 231

EA 344911

LAST REVISION 00-00-00

DATE PLOTTED => $DATE

Caltrans

NOTES:
1. FOR DETAILS NOT SHOWN SEE STANDARD PLAN D90.
2. EL = ELEVATION
3. INSTALL 10 mm WELDED STEEL PLATE ON 2 NEWLY CONSTRUCTED FISH WEIRS ONLY.

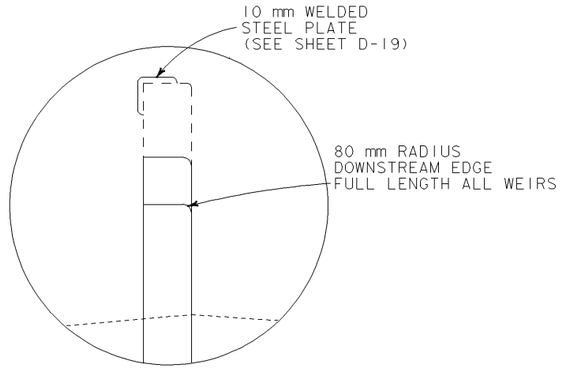

DETAIL "C"

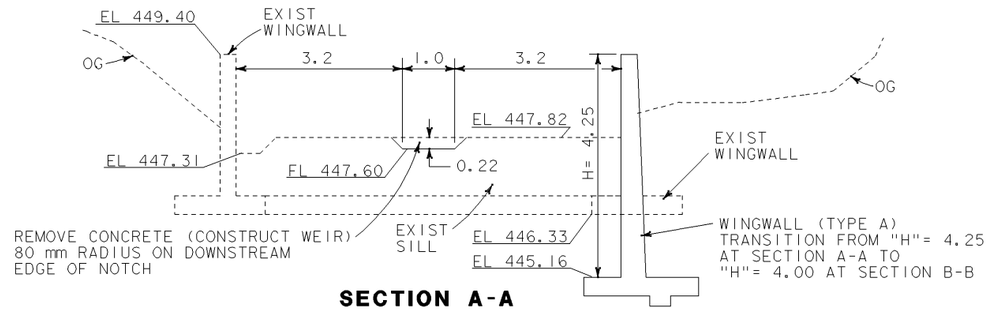

SECTION A-A

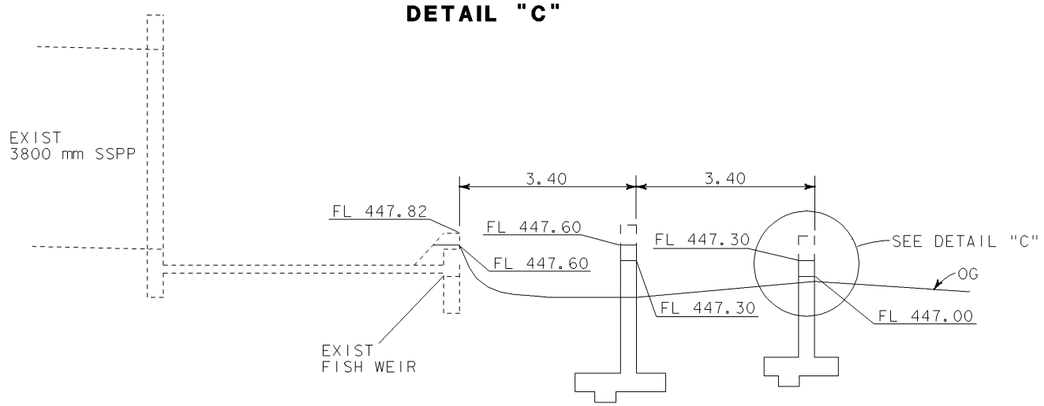

SECTION D-D

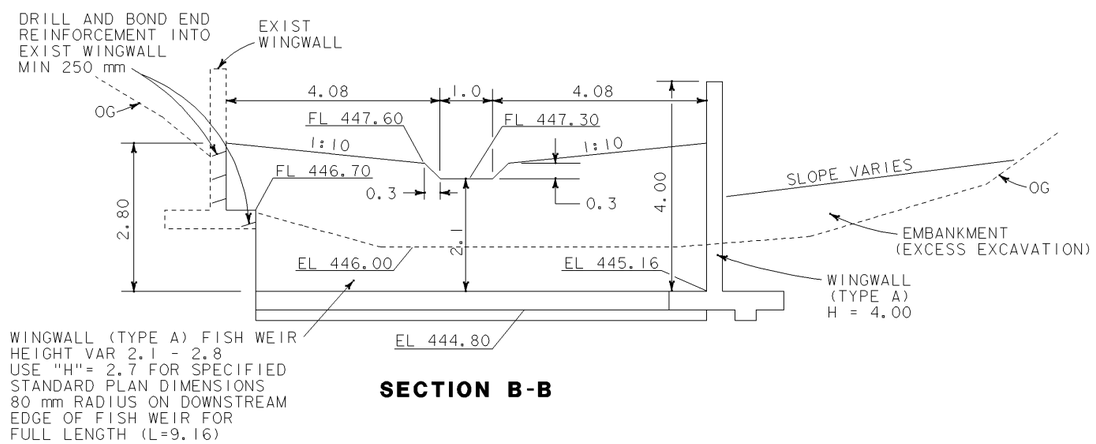

SECTION B-B

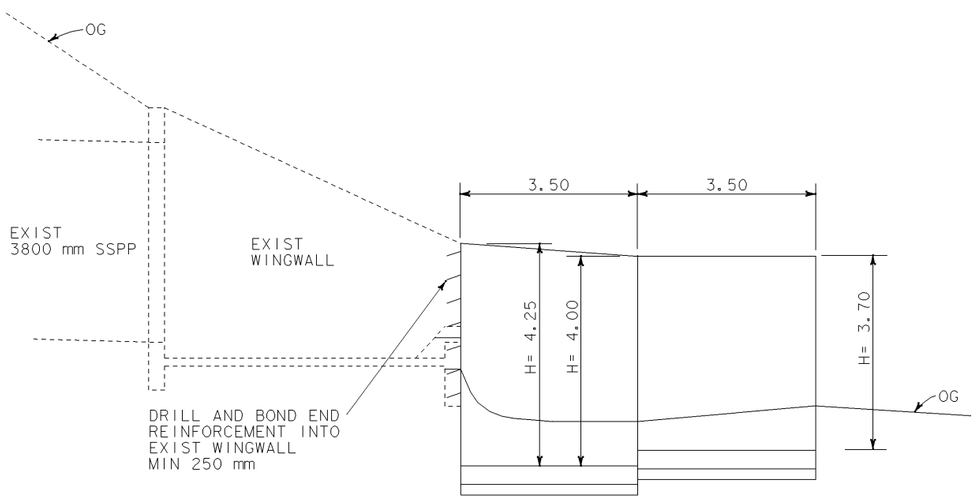

SECTION E-E

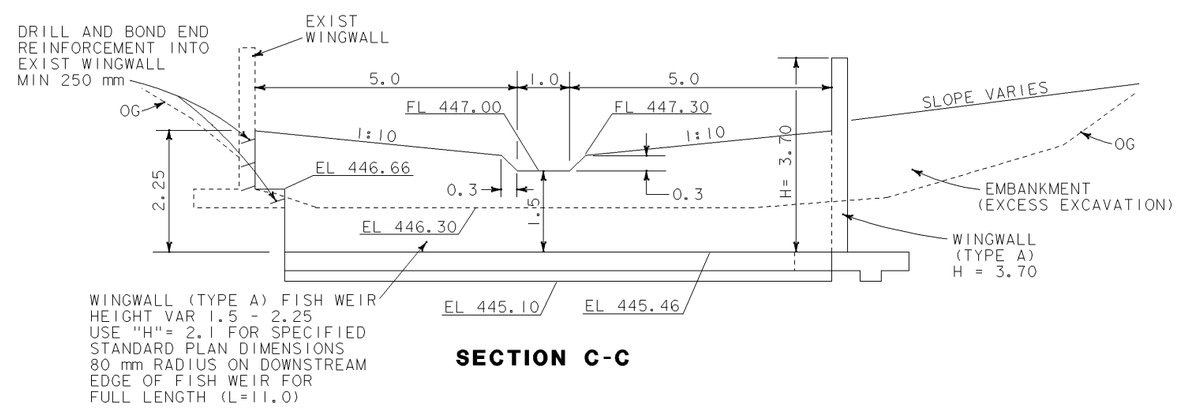

SECTION C-C

3

KP 50.39

ALL DIMENSIONS ARE IN METERS UNLESS OTHERWISE SHOWN.

DRAINAGE DETAILS
NO SCALE

D-15

Caltrans

DATE PLOTTED => $DATE
LAST REVISION 00-00-00

FOR REDUCED PLANS ORIGINAL SCALE IS IN MILLIMETERS 0 20 40 60 80

USERNAME => $USER
DGN FILE => $REQUEST

CU 03 231

EA 344911

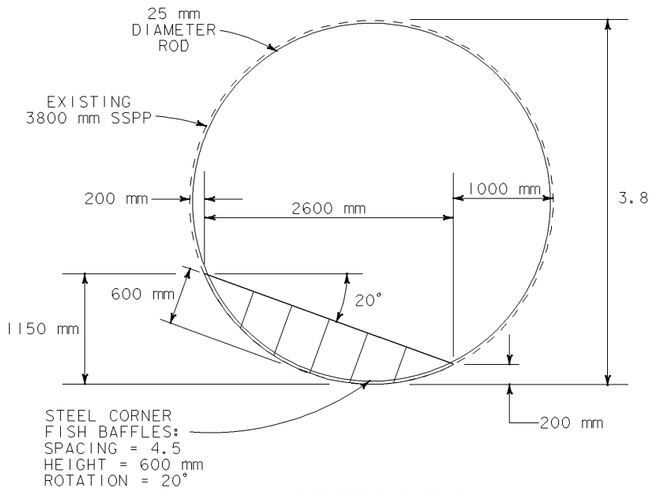

SECTION F-F

SEE SHEET D-16 FOR DETAILS NOT SHOWN

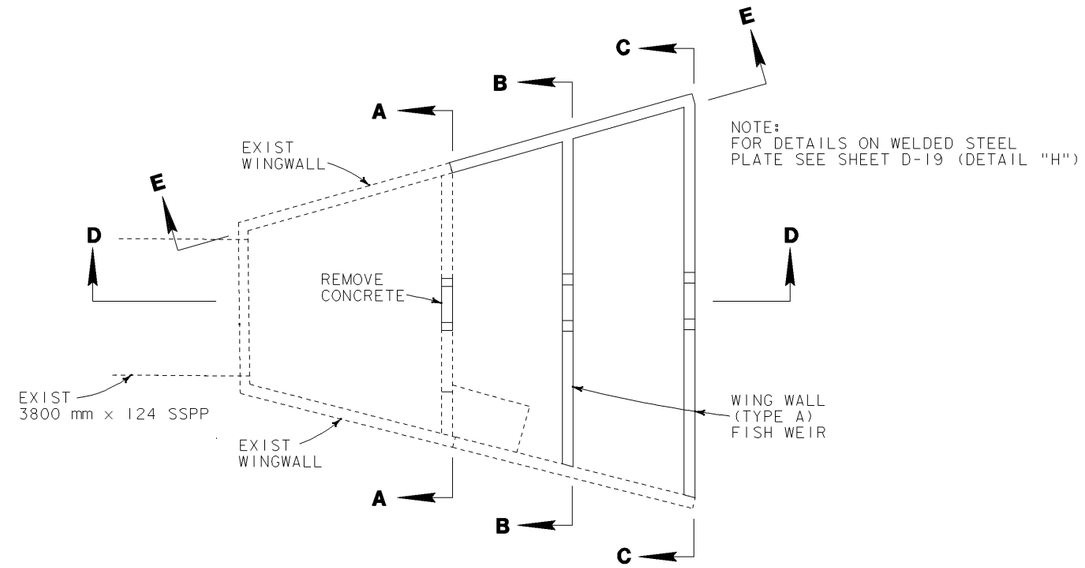

PLAN VIEW
DETAIL "B"

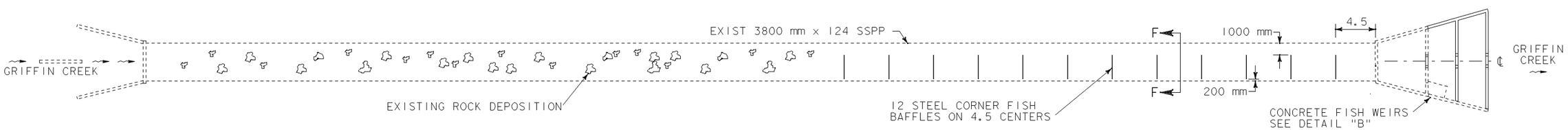

PLAN VIEW
KP 50.39 3

ALL DIMENSIONS ARE IN METERS UNLESS OTHERWISE SHOWN.

DRAINAGE DETAILS
NO SCALE
D-14

Caltrans

DATE PLOTTED => $DATE
LAST REVISION 00-00-00

FOR REDUCED PLANS ORIGINAL SCALE IS IN MILLIMETERS 0 20 40 60 80

USERNAME => $USER
DGN FILE => $REQUEST

CU 03 231

EA 344911

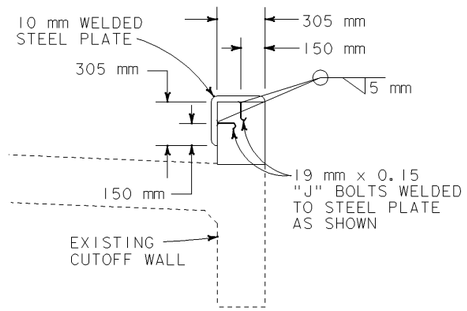

SECTION G-G

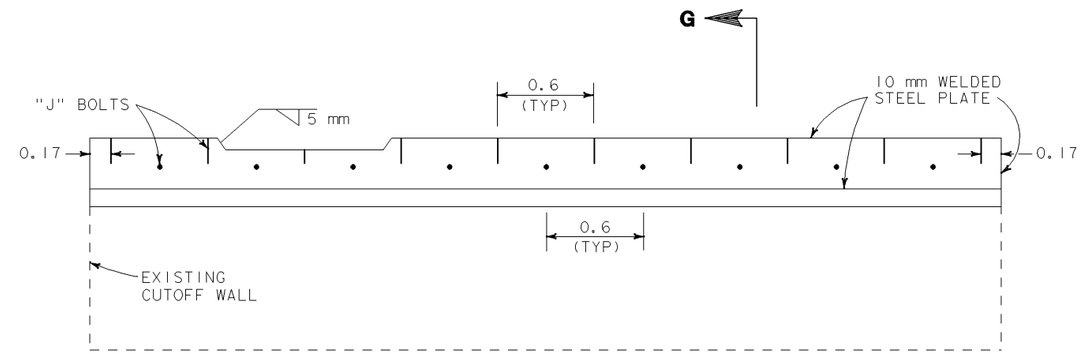

FRONT VIEW

DETAIL "H" 2

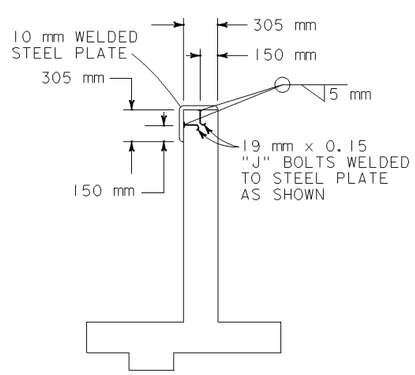

SECTION H-H

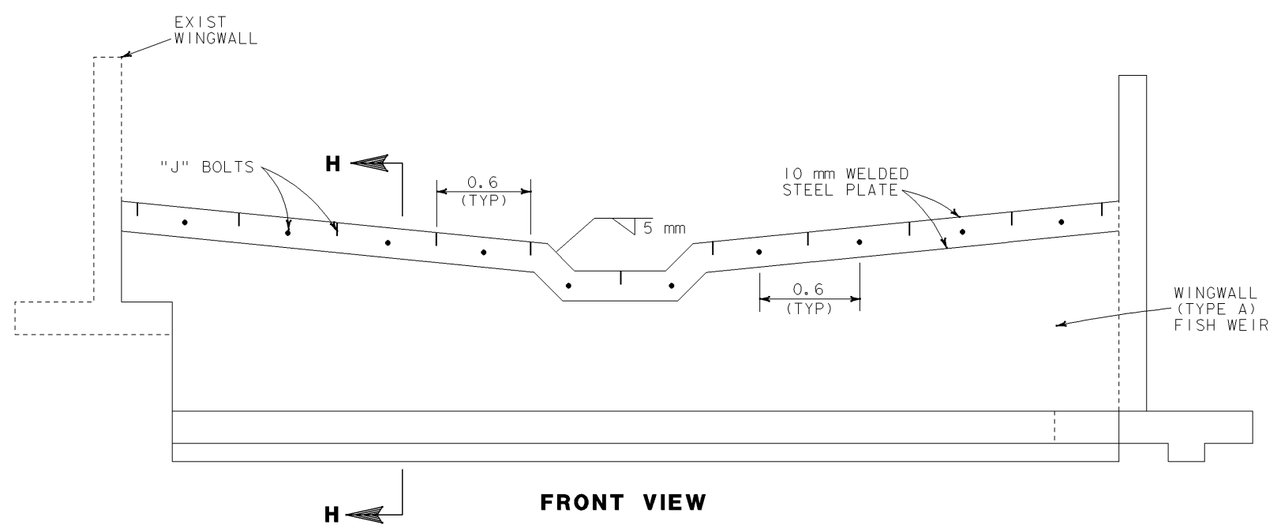

FRONT VIEW

DETAIL "I" 3

ALL DIMENSIONS ARE IN METERS UNLESS OTHERWISE SHOWN.

DRAINAGE DETAILS

NO SCALE

D-19

Caltrans

DATE PLOTTED => $DATE

LAST REVISION 00-00-00

FOR REDUCED PLANS ORIGINAL SCALE IS IN MILLIMETERS 0 20 40 60 80

USERNAME => $USER
DGN FILE => $REQUEST

CU 03 231

EA 344911