NOTE:
* = KEY FL ELEVATION

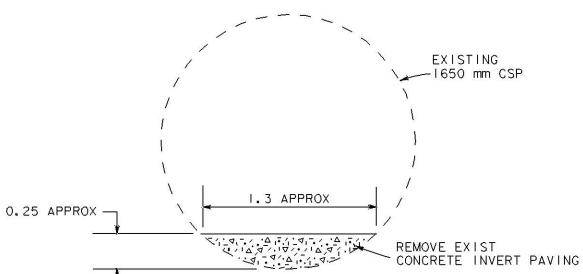

REMOVE CONCRETE INVERT PAVING ⓑ

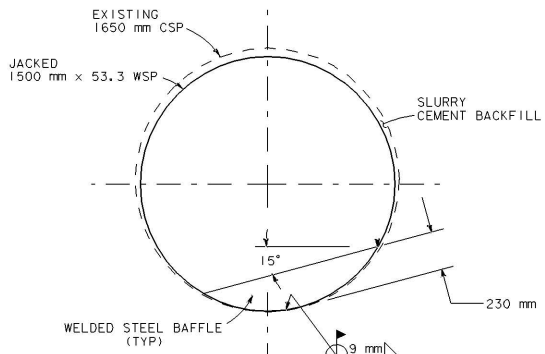

9.53 mm STEEL PLATE BAFFLE ⓒ

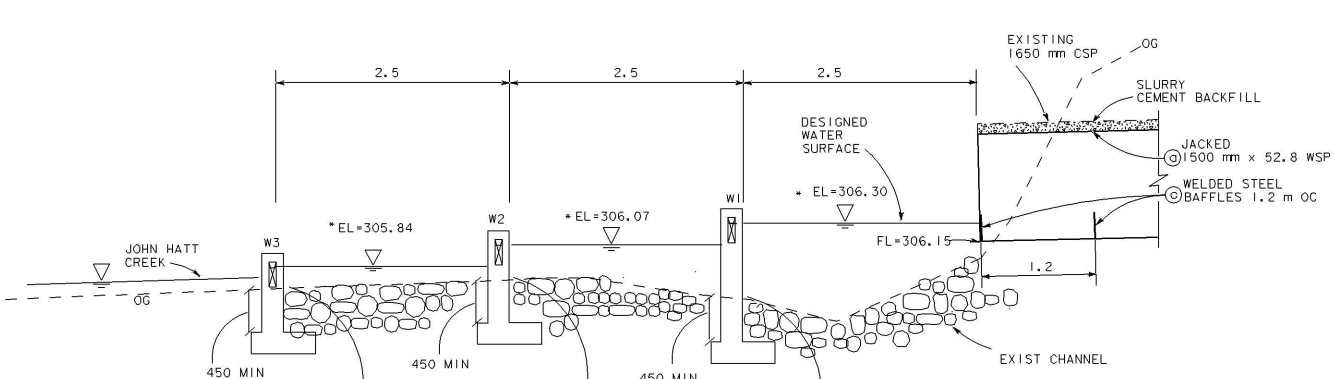

ALL DIMENSIONS ARE IN METERS
UNLESS OTHERWISE SHOWN

OUTLET DETAIL

DRAINAGE DETAILS
NO SCALE

D-3

LAST REVISION 00-00-00
DATE PLOTTED => $DATE
TIME PLOTTED => $TIME

FOR REDUCED PLANS ORIGINAL SCALE IS IN MILLIMETERS 0 20 40 60 80

USERNAME => $USER
DGN FILE => $REQUEST

CU 03232

EA 418201