NORTH BANK ROAD (HWY 197)
(4.6 MILES NORTH TO HWY 101)

TBM 1

STOP

LIMITS OF DISTURBANCE, SEE DRAWING D-1 FOR MORE INFORMATION

80' (N) METAL BEAM GUARDRAIL W/ TYPE "SRT" TERMINAL SYSTEM ACCORDING TO CALTRANS STANDARD PLAN A77A, A77B, A77C, A77D, A77L, AND STANDARD SPECIFICATIONS 83-1.02

90' (N) METAL BEAM GUARDRAIL W/ TYPE "SRT" TERMINAL SYSTEM AS DEFINED FOR OTHER SIDE OF ROAD

(N) OUTLET POOL TO BE FORMED IN FIRST 10' DOWNSTREAM OF STRUCTURE. 12" WASHED COBBLE TO BE PLACED IN POOL, SEE 4 C1|C3

(N) 12" FACING CLASS RSP TO BE PLACED IN HATCHED AREA 10' UPSTREAM OF ROCK WEIR & DOWNSTREAM AS SHOWN AFTER (N) BOULDERS PLACED

(N) BOULDER, 2 ½' MIN. DIA. TYP. 5 PLCS TO PROTRUDE ABOVE CHANNEL BED 12"-18", TYP. LOCATION CAN BE SCALED FROM DWG & VERIFIED BY DIRECTION DURING PLACEMENT

ROCK WEIR TO BEGIN AT STA 2+10, SEE 1 C1|C3

(N) 2 TON RSP WITH FACING CLASS RSP PLACED ON TOP TO FILL VOIDS, 2:1 MAX SLOPE, TYP BOTH SIDES

(N) METAL PLATE OUTLET ON CONCRETE FOOTING, SEE SHEETS S-1, S-2 AND S-3.

2:1 MAX. TYP.

TBM 2

TBM 3

TBM 4

TAN OAK DRIVE

TRANSITION TO (E) ROAD WIDTH LAST 10'

ASPHALT CONCRETE SURFACING 2,870 SF± WITH 3" MIN. THICKNESS OVER 6" CLASS 2 AGG BASE 95% RC

(N) ½ TON RSP W/ 2:1 AT CULVERT AND 1:1 AT UPSTREAM RIGHT BANK (EAST SIDE). BACKFILL W/ NATIVE TOPSOIL ABOVE ORDINARY HIGH WATER

CONSTRUCT TEMPORARY CLEAN GRAVEL COFFER DAM, SEE 3 C1|C3

SOME (E) TREES FROM DEMOLITION MAY BE PLACED ON BANKS AT DISCRETION & DIRECTION OF OWNER

(N) ½ TON RSP W/ 2:1 MAX SLOPE, 2' MIN THICKNESS BACKFILL W/ NATIVE TOP SOIL ABOVE ORDINARY HIGH WATER

GRAVEL ACCESS ROAD

0 10' 20'
SCALE 1" = 10'

PERSPECTIVE SKETCH OF CULVERT INLET (N.T.S.)

NOTE:
LOCATION OF EXISTING UTILITIES & STRUCTURES ARE FROM THE BEST INFORMATION AVAILABLE. EXACT LOCATION AND COMPLETENESS ARE NOT GUARANTEED. CONTRACTOR SHALL NOTIFY UNDERGROUND SERVICES ALERT (800) 642-2444 A MIN. OF 48 HOURS PRIOR TO ANY EXCAVATION AND POTHOLE FOR EXACT LOCATION.

SYM.	DESCRIPTION	DATE	APPROVED

REVISIONS

WINZLER & KELLY
CONSULTING ENGINEERS
633 THIRD STREET
EUREKA, CA 95501-0417
PH (707) 443-8326
FAX (707) 444-8330

SUBCONSULTANT
MICHAEL LOVE & ASSOCIATES
Hydrologic Engineering Services
PO BOX 4477 • ARCATA CA, 95518 • (707) 839-7867

DES TL/ML/SA
DRN SJD
SUPV SA
CHK AJC

BAR IS ONE INCH ON ORIGINAL DRAWING
0 1"
IF NOT ONE INCH ON THIS SHEET, ADJUST SCALES ACCORDINGLY

REGISTERED PROFFESSIONAL ENGINEER
STEVEN A. ALLEN
No. 62021
Exp.
CIVIL
STATE OF CALIFORNIA
SEAL

DEL NORTE COUNTY
PEACOCK CREEK SALMONID MIGRATION BARRIER REMOVAL PROJECT

CIVIL

CIVIL SITE PLAN

JOB NUMBER 02177204

SHEET 4 OF 10

C-1

02177204\dwg\d-1.dwg 1 date: 4-23-03 @ noon

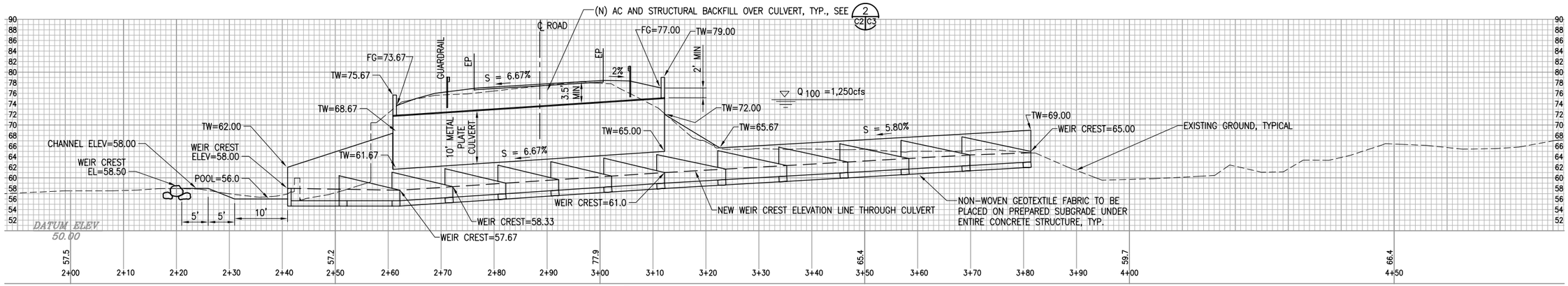

1 C2|C2 THALWEG PROFILE 1+90 TO 4+80

SCALE: 1"=10'

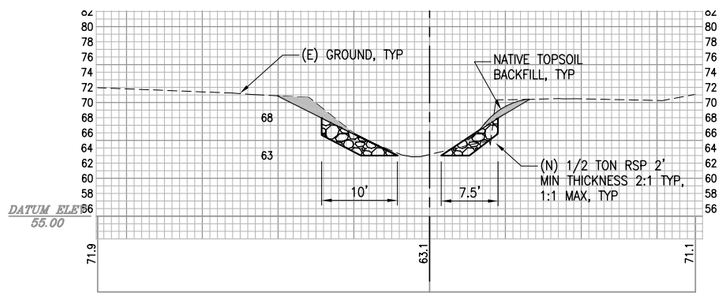

A C1|C3 CROSS SECTION

SCALE: 1"=10'

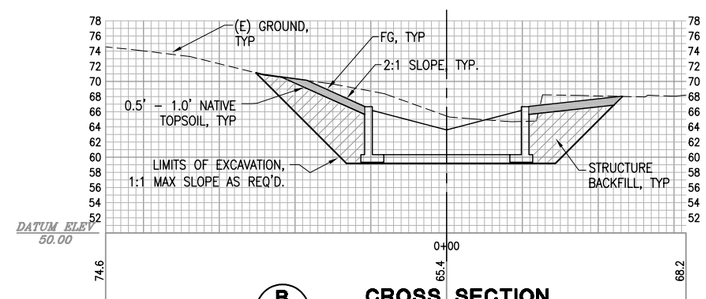

B C1|C3 CROSS SECTION

SCALE: 1"=10'

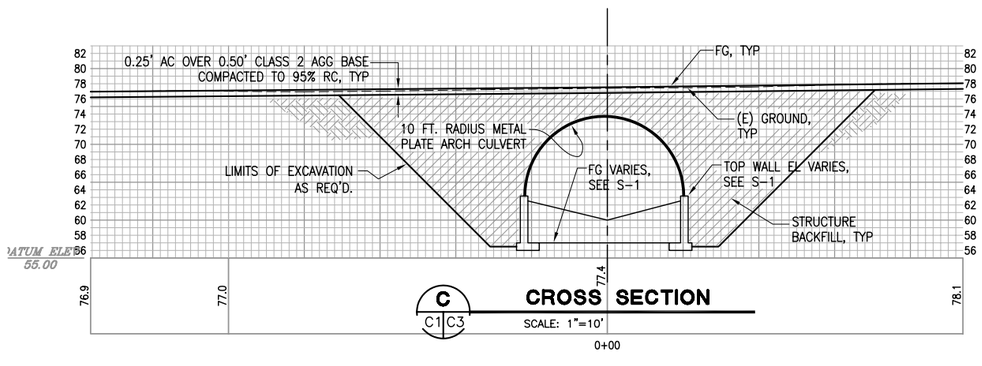

C C1|C3 CROSS SECTION

SCALE: 1"=10'

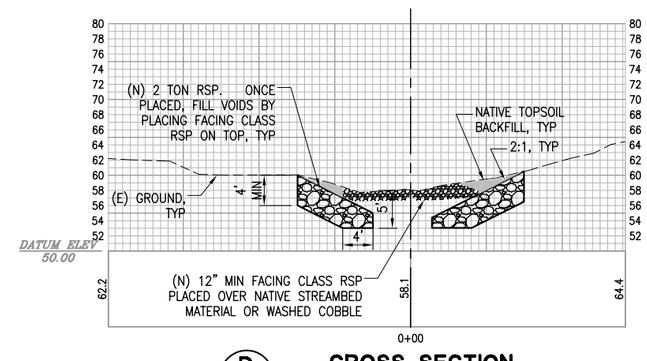

D C1|C3 CROSS SECTION

SCALE: 1"=10'

NOTE:

LOCATION OF EXISTING UTILITIES & STRUCTURES ARE FROM THE BEST INFORMATION AVAILABLE. EXACT LOCATION AND COMPLETENESS ARE NOT GUARANTEED. CONTRACTOR SHALL NOTIFY UNDERGROUND SERVICES ALERT (800) 642-2444 A MIN. OF 48 HOURS PRIOR TO ANY EXCAVATION AND POTHOLE FOR EXACT LOCATION.

SYM.	DESCRIPTION	DATE	APPROVED
	REVISIONS		

WINZLER & KELLY
CONSULTING ENGINEERS
633 THIRD STREET
EUREKA, CA 95501-0417
PH (707) 443-8326
FAX (707) 444-8330

SUBCONSULTANT
MICHAEL LOVE & ASSOCIATES
Hydrologic Engineering Services
PO BOX 4477 • ARCATA CA 95518 • (707) 839-7867

DES TL/ML/SA DRN SJD
SUPV SA CHK AJC

BAR IS ONE INCH ON ORIGINAL DRAWING
0 1"
IF NOT ONE INCH ON THIS SHEET, ADJUST SCALES ACCORDINGLY

REGISTERED PROFESSIONAL ENGINEER STEVEN A. ALLEN No. 62021 Exp. CIVIL STATE OF CALIFORNIA
SEAL

DEL NORTE COUNTY
PEACOCK CREEK SALMONID MIGRATION BARRIER REMOVAL PROJECT
CIVIL
PROFILE AND SECTIONS

JOB NUMBER 02177204

SHEET 5 OF 10

C-2