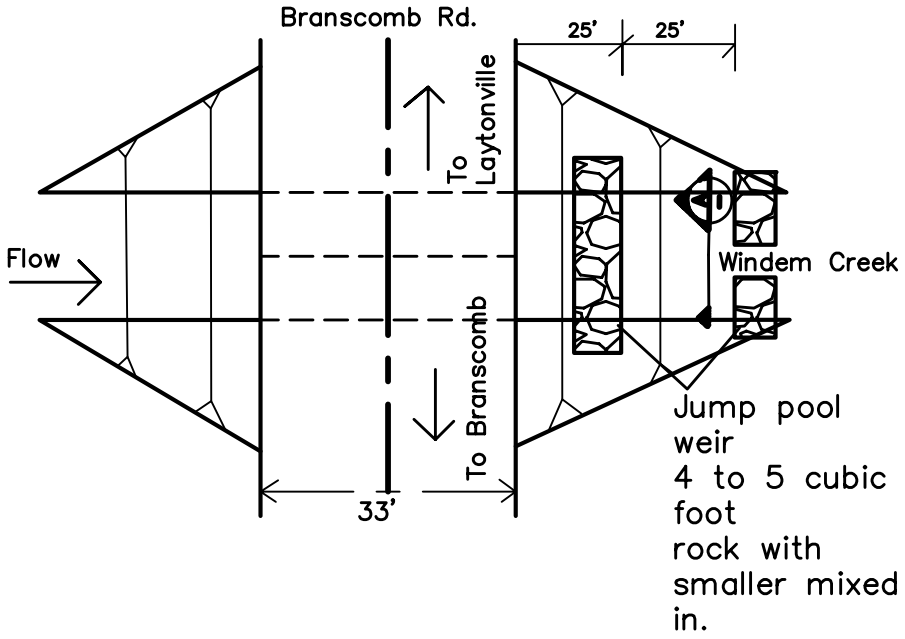

INVERT PAVING

Minor concrete for invert paving shall conform to CALTRANS standard provisions Sect. 51, and shall contain not less than 25 lbs of portland cement per CF. Max. aggregate size: ⅜". Water shall not be allowed to flow through the culvert after paving for at least 48 hours.

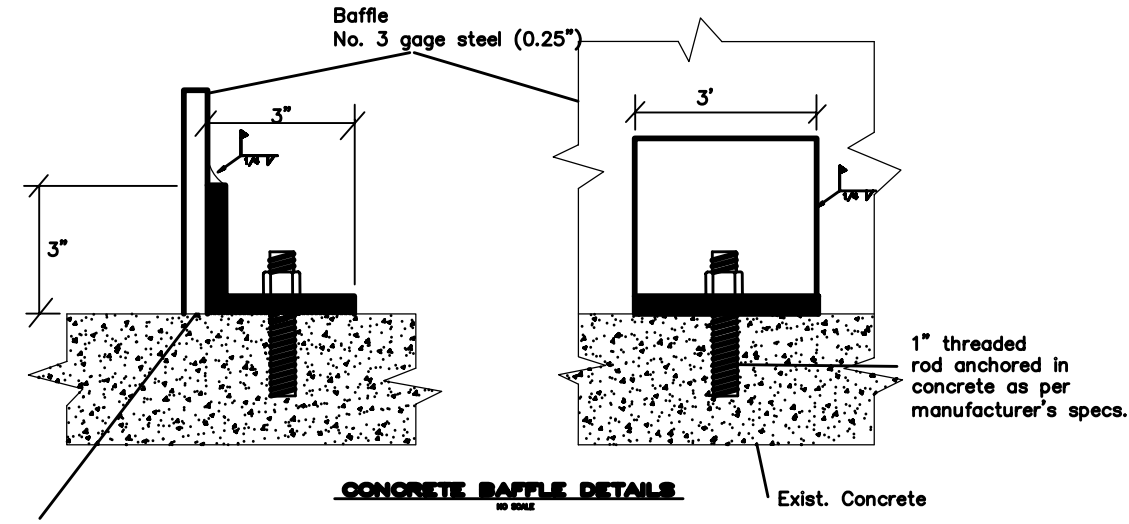

CONCRETE BAFFLE DETAILS
NO SCALE

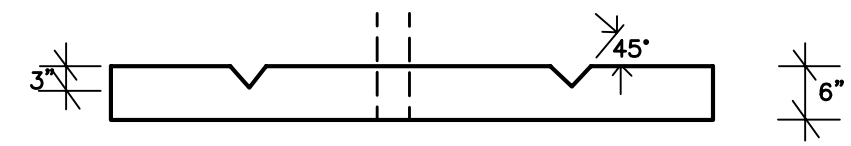

NOTCHED PLATE DETAILS
NO SCALE

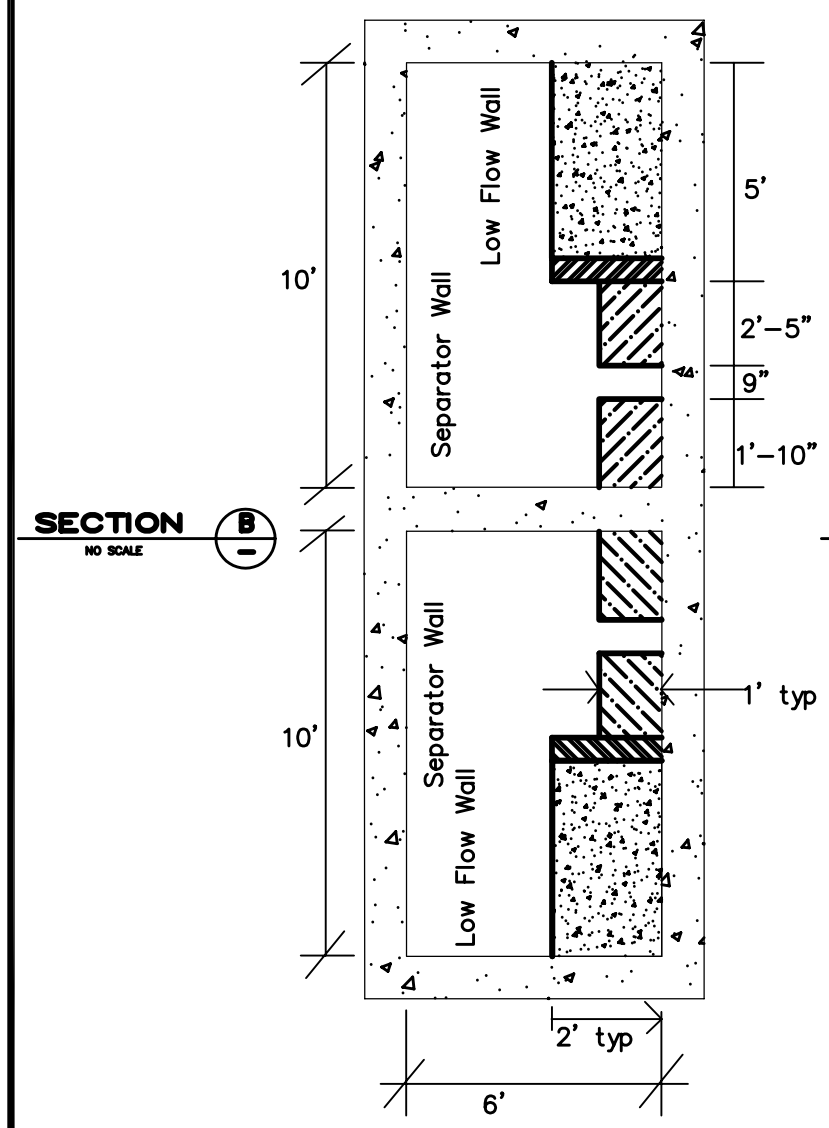

SECTION B
NO SCALE

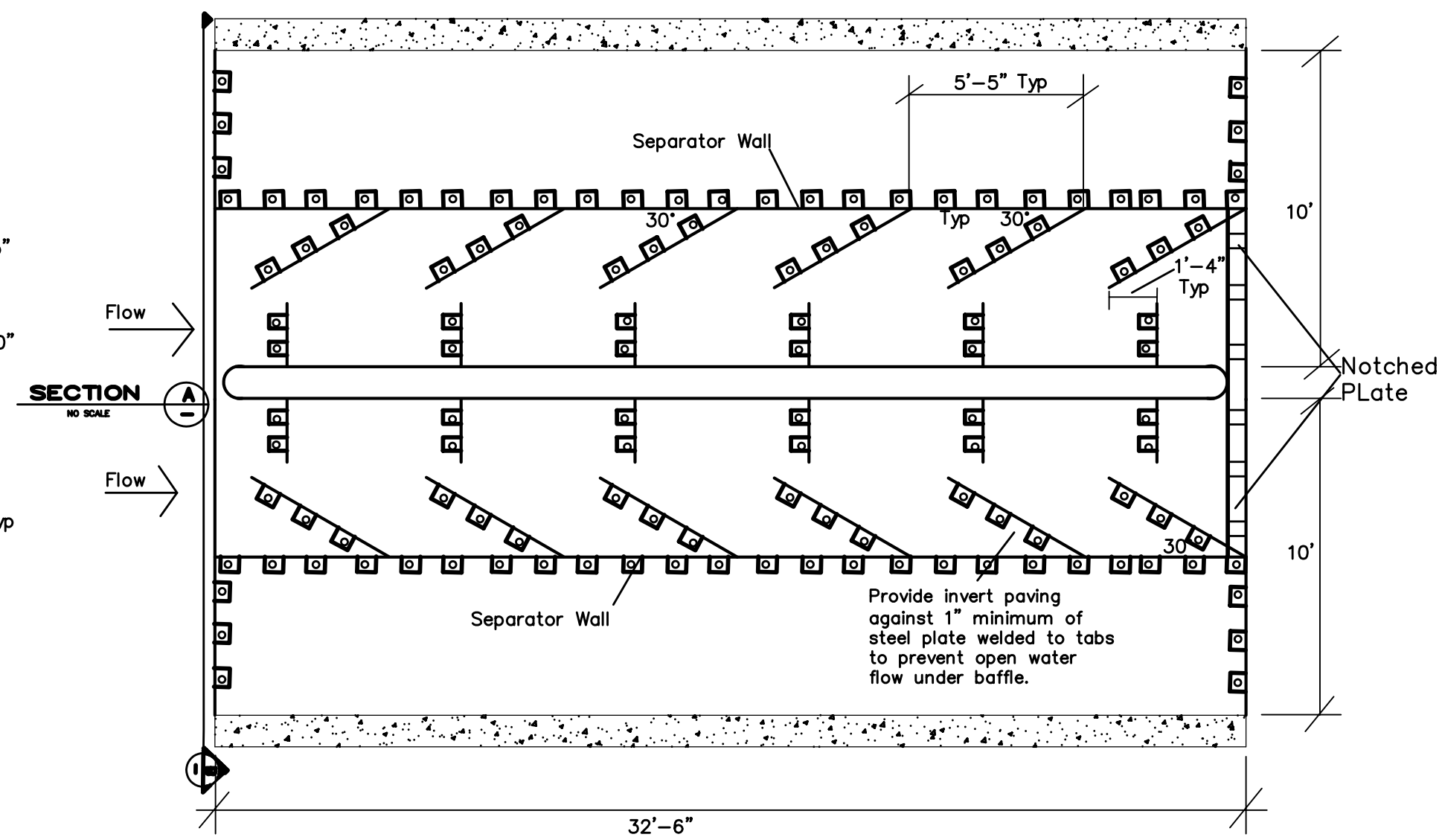

SECTION A
NO SCALE

MENDOCINO COUNTY DEPARTMENT OF TRANSPORTATION
DRAINAGE AND HABITAT CONSERVATION DIVISION OF LAND IMPROVEMENT
340 LAKE MENDOCINO DRIVE UKIAH, CA 95482 (707) 463-4363 FAX (707) 463-6474

DESIGNED BY H.N.D. CHECKED BY H.N.D. DRAWN BY H.N.D.
HOWARD N. DASHIELL DATE XX-XX-01 RCE 42001
EUGENE C. CALVERT DATE XX-XX-01 DIRECTOR

FISH BARRIER-BRANSCOMB ROAD-2001-02
CR.XXX.-.MP.XXX.-.XXXXXXXXXXX.CA.
APN(S)24-113-03

WINDEM CREEK PLAN AND PROFILE

DATE XX-XX-01
JOB NO. C-0009
DRAWING NUMBER 5 OF 5