SICKLE CREEK CROSSING FR 8348
MANISTEE RANGER DISTRICT
MANISTEE NATIONAL FOREST
MANISTEE COUNTY MICHIGAN

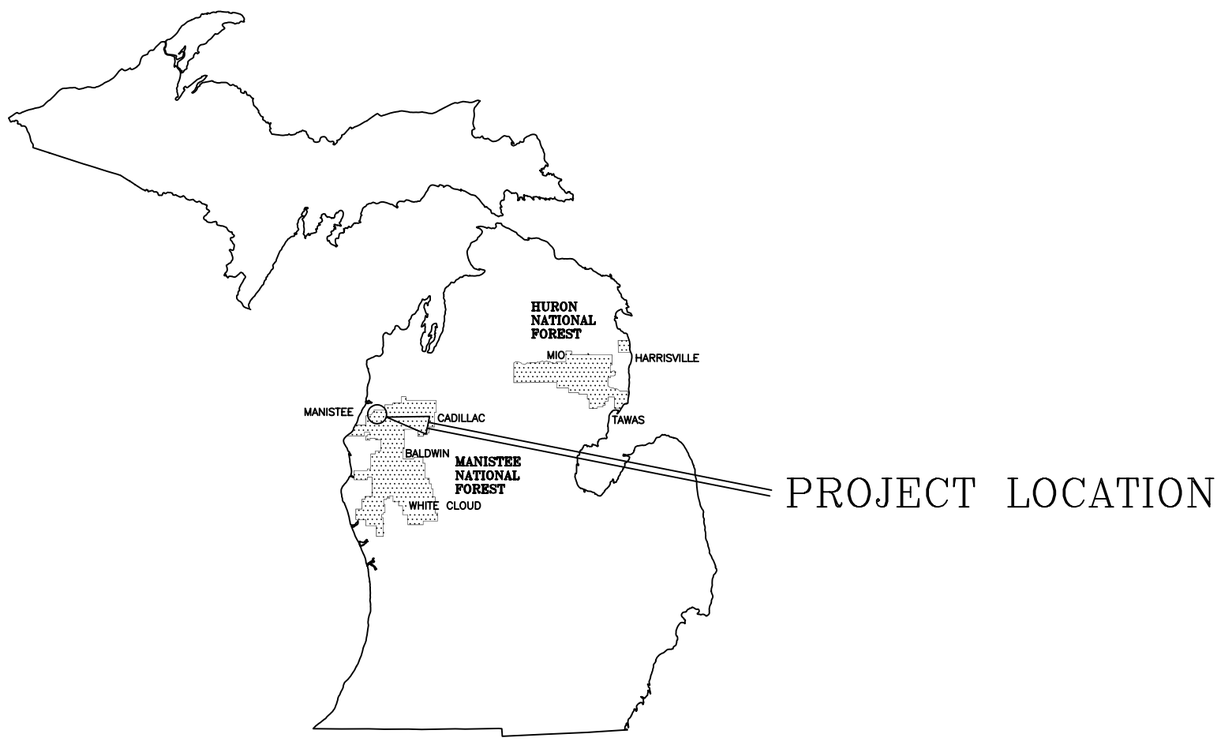

HURON – MANISTEE NATIONAL FORESTS

U.S. DEPARTMENT OF AGRICULTURE – FOREST SERVICE

INDEX OF SHEETS

SHEET	SHEET TITLE
1	COVER SHEET
2	TYPICALS
3–4	STREAM PLAN & PROFILE
5	ROAD PLAN & PROFILE
6	BRIDGE STRUCTURE
7	ROAD X–SECTIONS

DISTRICT OFFICE

DISTRICT RANGER _____ DATE _____

SUPERVISORS OFFICE

FOREST ENGINEER _____ DATE _____

FOREST SUPERVISOR _____ DATE _____

HMR 653–1

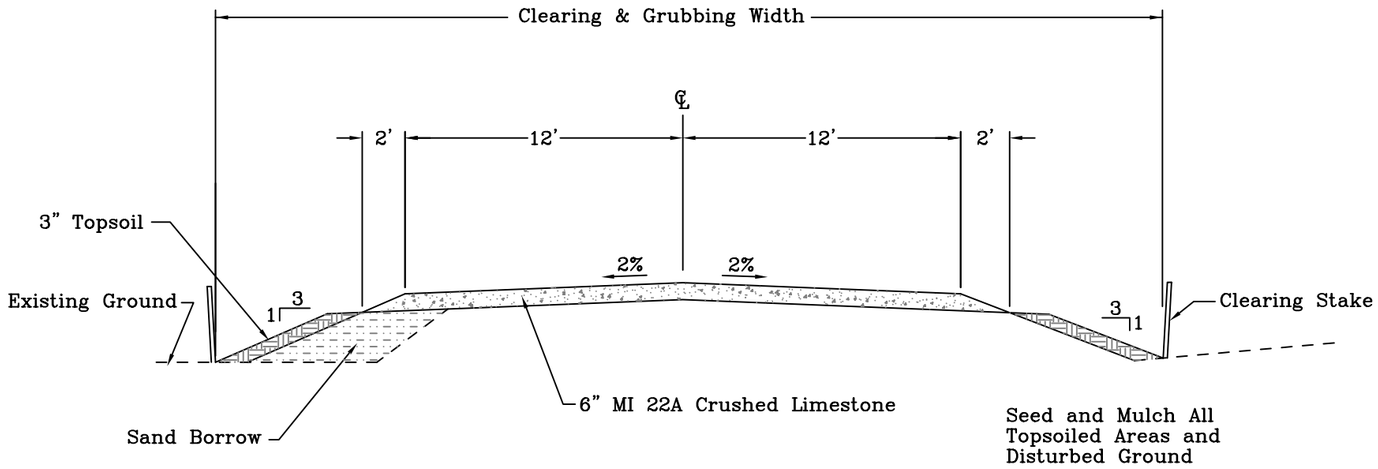

TYPICAL SECTION
DOUBLE LANE ROAD

ESTIMATE OF QUANTITY

PAY ITEM NO.	DESCRIPTION	PAY UNIT	QUANTITY
201(04)	Clearing & Grubbing, Slash Treatment Methods for Tops & Limbs and Logs 4 or 10, Stumps 10 Utilization of Timber 4	Lump Sum	Lump Sum
202(05)	Removal of Culverts	Lump Sum	Lump Sum
203(10)	Borrow Excavation Placement Method 2	Cubic Yard	300
304(10)	Crushed Aggregate Grading MI 22A Compaction A	Cubic Yard	150
601(01)	Mobilization	Lump Sum	Lump Sum
619(01)	Hand–Placed Riprap, Class IV	Cubic Yard	20
624(01)	Furnishing & Placing Topsoil	Cubic Yard	20
625(05)	Seeding, Dry Method	Acre	0.1
625(19)	Erosion Control Blankets	Square Yard	160
633(12)	Warning Signs & Markers	Each	4
639(01)	Precast Concrete Bridge	Lump Sum	Lump Sum

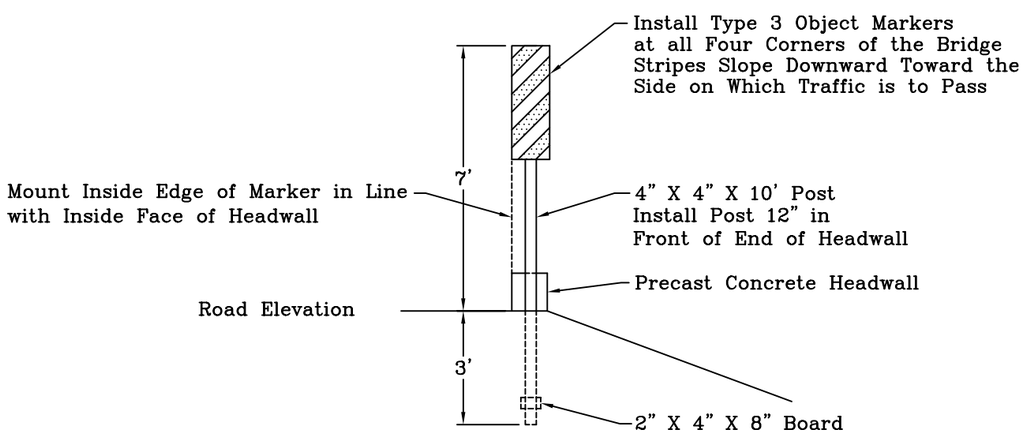

OBJECT MARKER INSTALLATION

CONSTRUCTION NOTES

Section Numbers in the Notes Below Refer to the Applicable Portions of the USDA–Forest Sevice Specifications for Construction of Roads and Bridges, EM–7720–100 1985

Section 201 Clearing and Grubbing
Slash Shall be Disposed of by the Methods Shown in Schedule of Items
Method 4 – Scatter Limbs, Logs, and Tops a Minimum of 50 feet from Road & Stream
Method 10 – Remove Stumps from Site

Section 202 Removal of Structures & Obstructions
Two 36' Diameter by 36' Long Corrugated Steel Culverts Shall be Removed.

Section 203 Excavation & Embankment
203.03 Source – Borrow Shall be Sand from an Approved Commercial Source
Borrow Shall be Compacted by Method 2–Layer Placement.
203.16 Construction Tolerance– Tolerance Shall be Class C.

Section 304 Aggregate Base
Crushed Aggregate Shall be Compacted by Method A – Operate Equipment Over Full Width

Section 619 Riprap
619.02 Materials – Riprap Shall be Fieldstone

Section 624 Topsoiling
624.02 Source – Furnished Topsoil Shall be from an Approved Commercial Source

Section 625 Seed & Mulching
625.02 Requirements – Erosion Control Blankets Shall be Excelsior with Wood Pegs

U.S. DEPARTMENT OF AGRICULTURE
FOREST SERVICE – EASTERN REGION
HURON–MANISTEE NATIONAL FOREST

DESIGNED Steve McDonald DATE 5/05
DRAWN Steve McDonald 5/05
CHECKED

RECOMMENDED:
APPROVED:

REVISIONS				
NO	REVISION	BY	APPROVED	DATE

AS BUILT
BY
CHECKED
DATE

PROJECT: SICKLE CREEK CROSSING FR #8348

SHEET TITLE: TYPICAL DETAILS

SCALE: NO SCALE

SHEET 2 OF 7

FILE NO. HMR 653–2

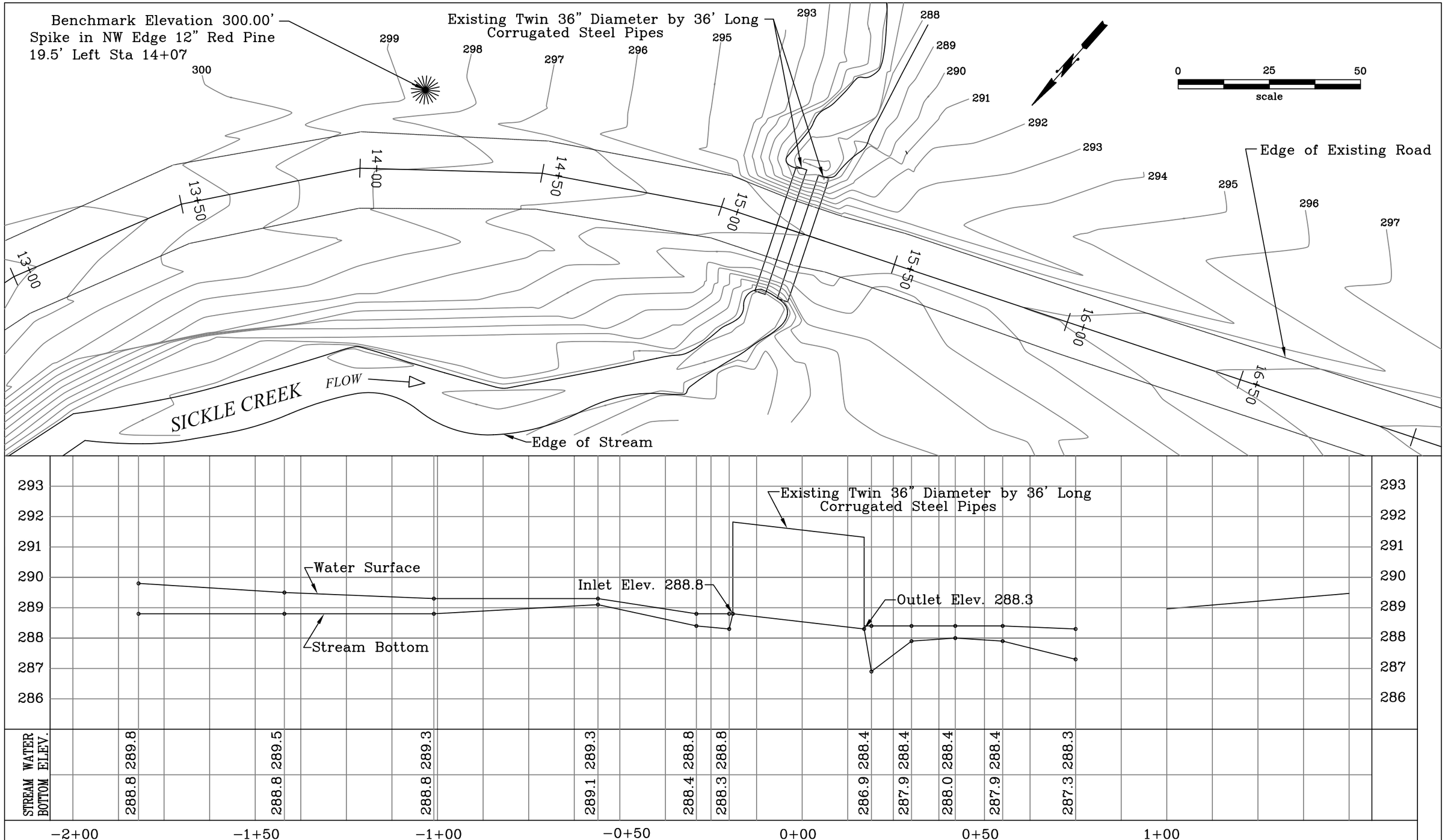

U.S. DEPARTMENT OF AGRICULTURE
FOREST SERVICE – EASTERN REGION
HURON–MANISTEE NATIONAL FOREST

DESIGNED Steve McDonald DATE 5/05
DRAWN Steve McDonald 5/05
CHECKED

RECOMMENDED:

APPROVED:

REVISIONS				
NO	REVISION	BY	APPROVED	DATE

AS BUILT
BY
CHECKED
DATE

PROJECT
SICKLE CREEK
CROSSING FR #8348

SHEET TITLE
EXISTING STREAM
PLAN & PROFILE

SCALE

SHEET 3 OF 7

FILE NO.
HMR 653–3

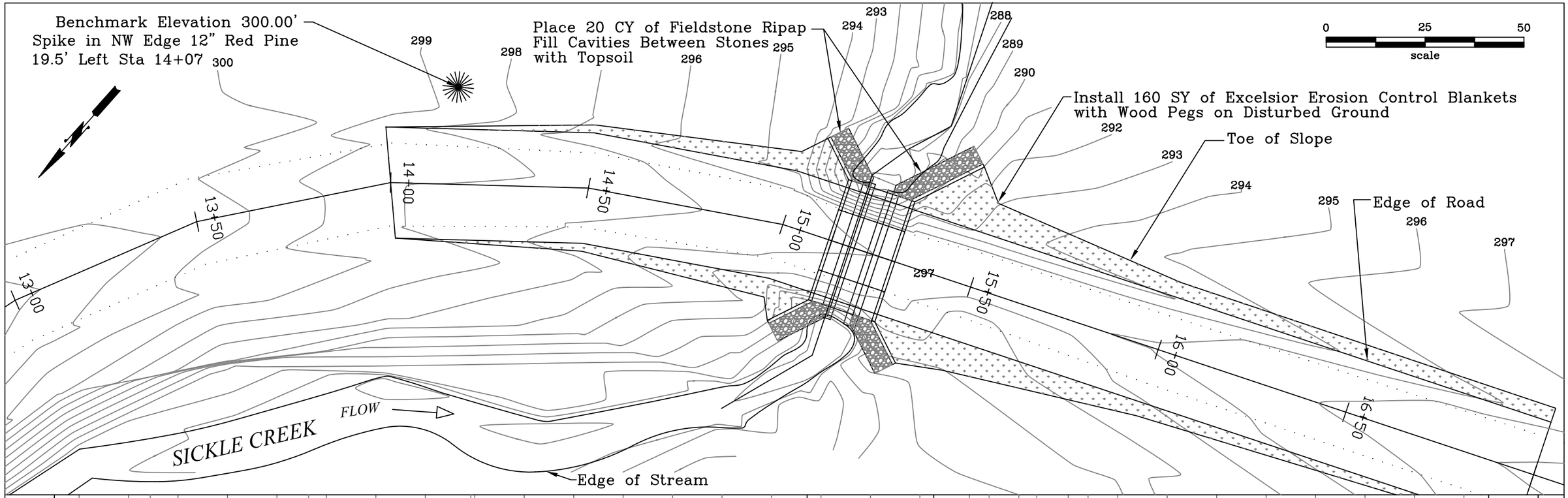

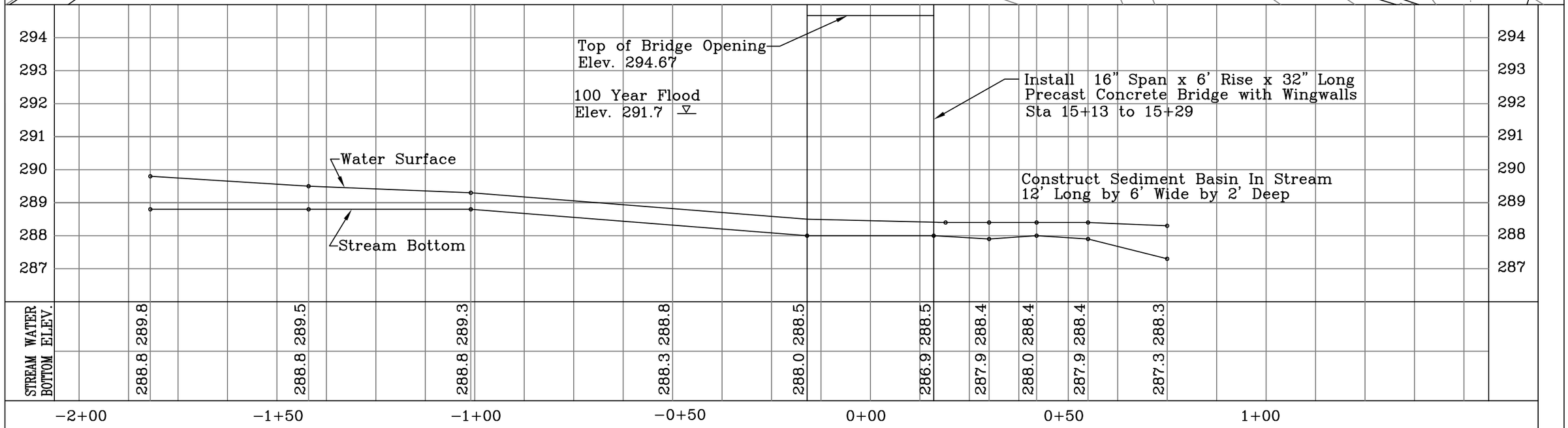

U.S. DEPARTMENT OF AGRICULTURE
FOREST SERVICE – EASTERN REGION
HURON–MANISTEE NATIONAL FOREST

DESIGNED Steve McDonald DATE 5/05
DRAWN Steve McDonald 5/05
CHECKED

RECOMMENDED:

APPROVED:

REVISIONS				
NO	REVISION	BY	APPROVED	DATE

AS BUILT
BY
CHECKED
DATE

PROJECT: SICKLE CREEK CROSSING FR #8348

SHEET TITLE: PROPOSED STREAM PLAN & PROFILE

SCALE

SHEET 4 OF 7

FILE NO. HMR 653–4

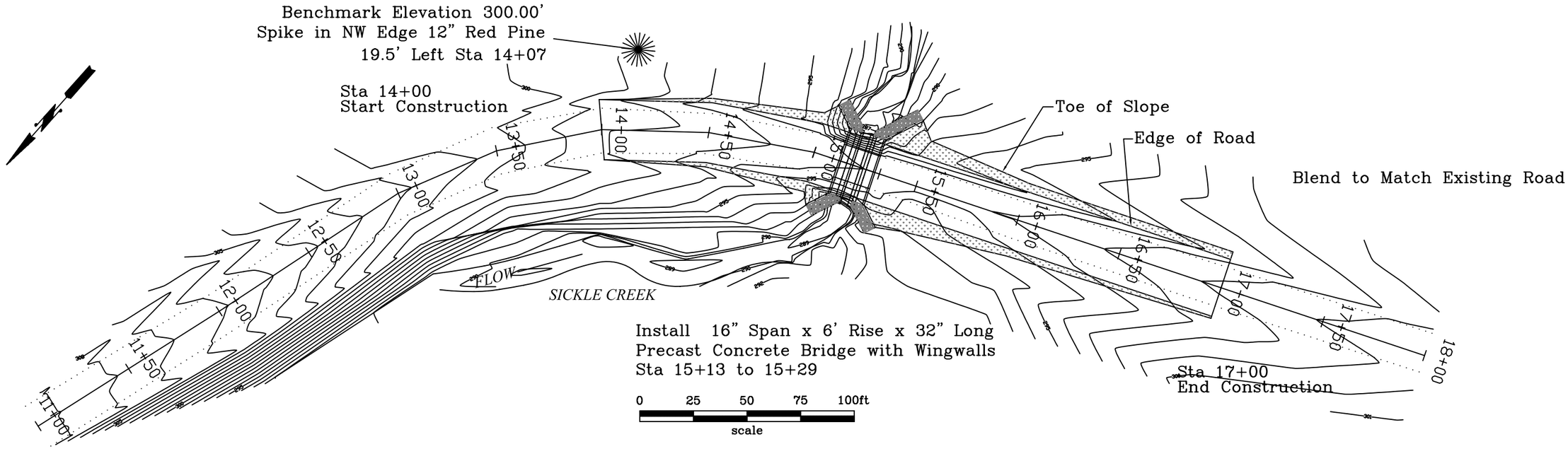

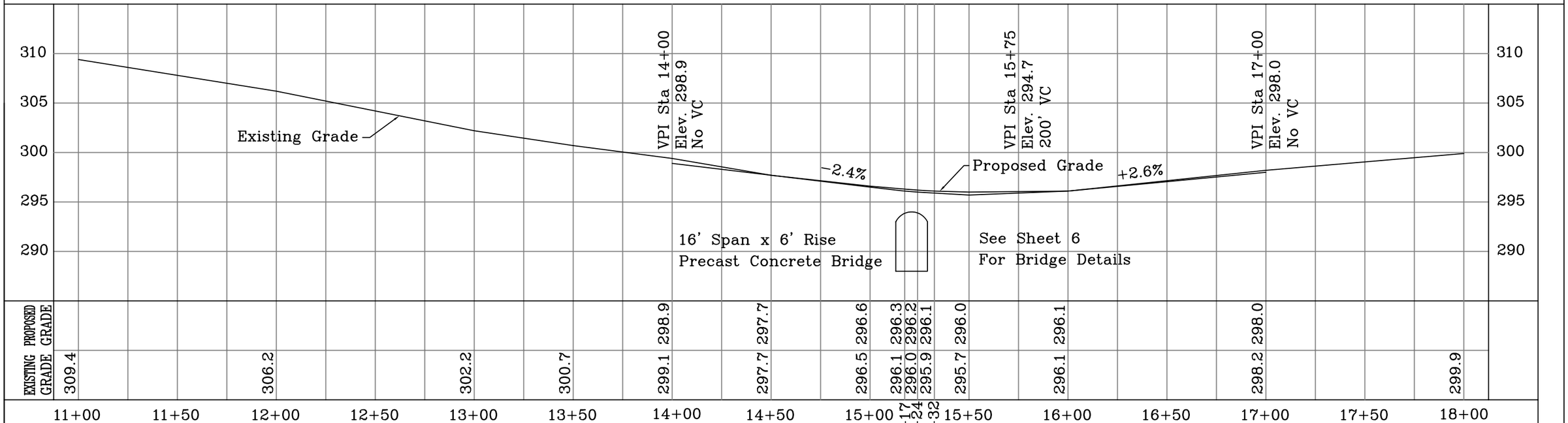

U.S. DEPARTMENT OF AGRICULTURE
FOREST SERVICE – EASTERN REGION
HURON–MANISTEE NATIONAL FOREST

DESIGNED Steve McDonald DATE 5/05
DRAWN Steve McDonald 5/05
CHECKED

RECOMMENDED:

APPROVED:

REVISIONS				
NO	REVISION	BY	APPROVED	DATE

AS BUILT
BY
CHECKED
DATE

PROJECT: SICKLE CREEK CROSSING FR #8348

SHEET TITLE: ROAD PLAN & PROFILE

SCALE

SHEET 5 OF 7

FILE NO. HMR 653-5

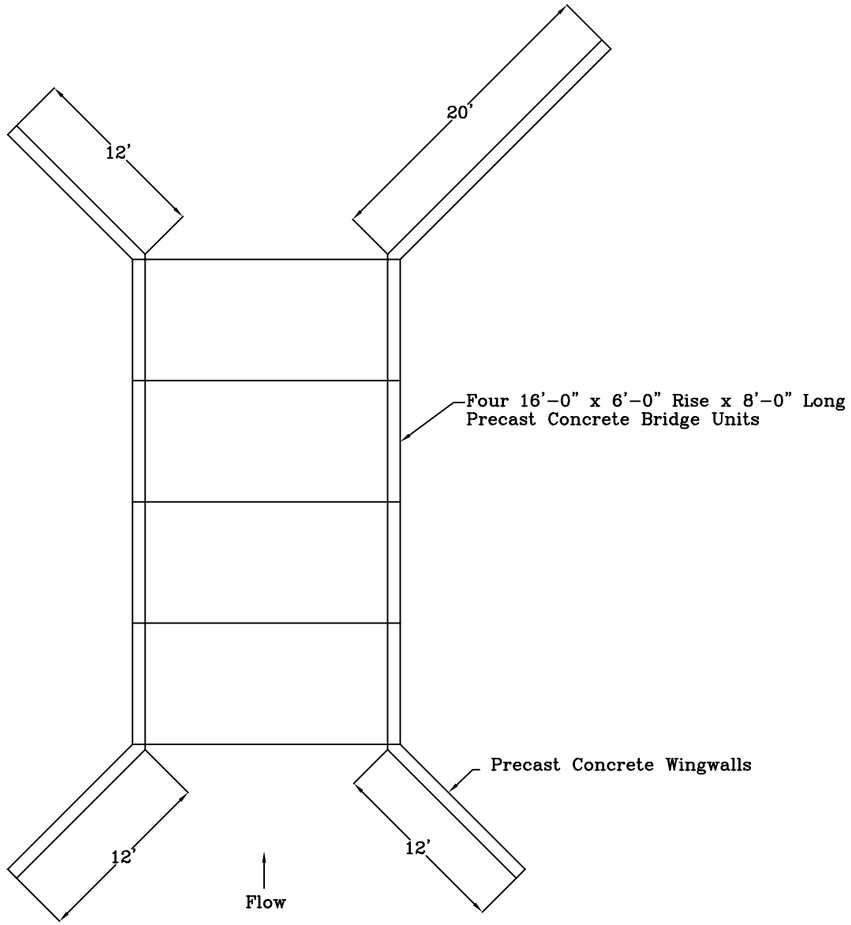

BRIDGE PLAN

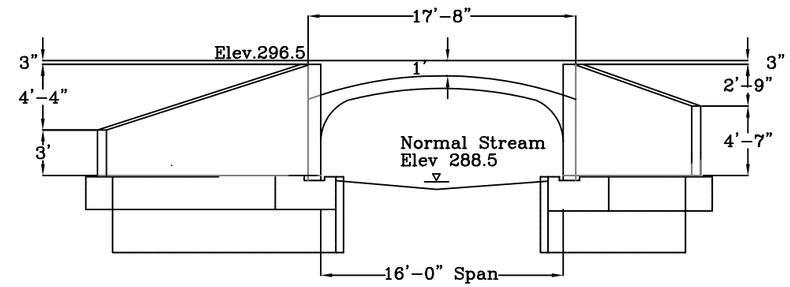

DOWNSTREAM END ELEVATION

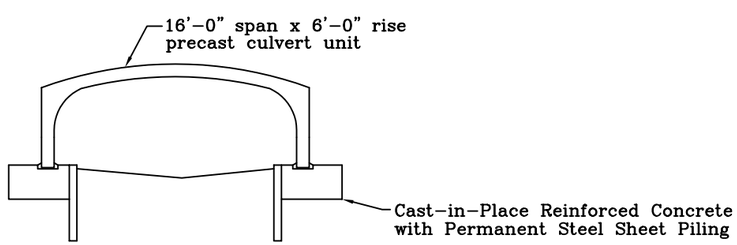

PRECAST UNIT SECTION

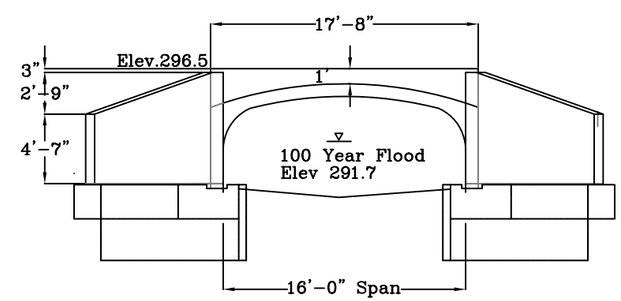

UPSTREAM END ELEVATION

U.S. DEPARTMENT OF AGRICULTURE FOREST SERVICE – EASTERN REGION HURON–MANISTEE NATIONAL FOREST	DESIGNED Steve McDonald DATE 5/05 DRAWN Steve McDonald 5/05 CHECKED	RECOMMENDED: APPROVED:	REVISIONS NO / REVISION / BY / APPROVED / DATE	AS BUILT BY CHECKED DATE	PROJECT SICKLE CREEK CROSSING FR #8348	SHEET TITLE PRECAST BRIDGE SCALE	SHEET 6 OF 7 FILE NO. HMR 653-6

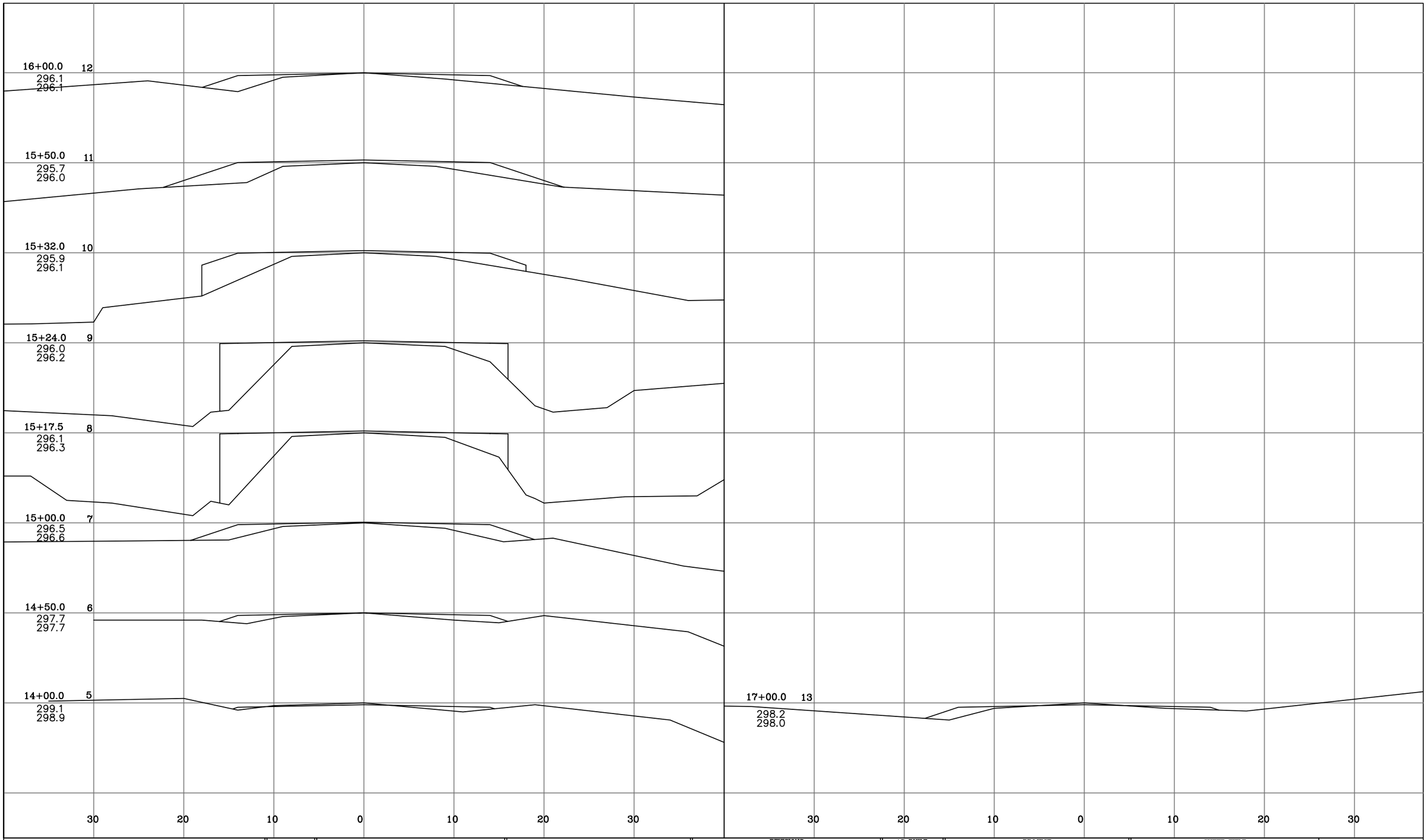

U.S. DEPARTMENT OF AGRICULTURE
FOREST SERVICE – EASTERN REGION
HURON–MANISTEE NATIONAL FOREST

DESIGNED Steve McDonald DATE 5/05
DRAWN Steve McDonald 5/05
CHECKED

RECOMMENDED:

APPROVED:

REVISIONS				
NO	REVISION	BY	APPROVED	DATE

AS BUILT
BY
CHECKED
DATE

PROJECT: SICKLE CREEK CROSSING FR #8348

SHEET TITLE: ROAD X–SECTIONS

SCALE

SHEET 7 OF 7

FILE NO. HMR 653–7