Design of Road Culverts for Fish Passage

2003

Design of Road Culverts for Fish Passage

Preface 4
Introduction 8
Chapter 1 – Habitat Issues at Road Crossings 9
Chapter 2 – Fish Barriers at Culverts 13
Chapter 3 – Culvert Design for Fish Passage 14
Chapter 4 – No-Slope Design Option 17
Chapter 5 – Hydraulic Design Option 19
Chapter 6 – Stream-Simulation Design Option 29
Chapter 7 – Channel Profile 40
Chapter 8 – High-Flow Capacity 48
Chapter 9 – Tide Gates and Flood Gates 49
Chapter 10 – Fishways 53
References 54
Additional Resources 55
Appendix A – Glossary 56
Appendix B – Washington Culvert Regulation 59
Appendix C – Design Flows for Ungauged Streams 63
Appendix D – Hydraulics of Baffles 72
Appendix E – Design of Roughened Channels 76
Appendix F – Summary Forms for Fish-Passage Design Data 86
Appendix G – Construction Unit Costs 99
Appendix H – Measuring Channel-Bed Width 100
Appendix I – Sample Design Sketches 103
Appendix J – Washington Department of Fish and Wildlife Contact Information 110

Updates and Feedback

Design of Road Culverts for Fish Passage is a work in progress. It was first published in 1999, and it has been updated several times since then. We welcome comments and ideas that would make the contents more useful. A summary of updates is available online at the Washington Department of Fish and Wildlife web page, www.wa.gov/wdfw/hab/engineer/cm/toc.htm. Comments or ideas for the guideline can be e-mailed to: ees@dfw.wa.gov; or mailed to:

Chief Habitat Engineer
Washington Department of Fish and Wildlife
600 Capitol Way N.
Olympia, WA 98501-1091

Acknowledgments

This guideline was produced with the assistance of many individuals.
Many thanks to reviewers who provided insight, advice and suggestions during its preparation.

Principal Author

Ken Bates, P.E., Chief Environmental Engineer, Washington Department of Fish and Wildlife

Contributing Authors

Bob Barnard, P.E., Washington Department of Fish and Wildlife
Bruce Heiner, P.E., Washington Department of Fish and Wildlife
J. Patrick Klavas, P.E., Washington Department of Fish and Wildlife
Patrick D. Powers, P.E., Washington Department of Fish and Wildlife

Reviewers and Technical Assistance

Thomas J. Burns, Washington Department of Fish and Wildlife
Kay Saldi-Caromile, P.E., Washington Department of Fish and Wildlife
Mike Chamblin, Washington Department of Fish and Wildlife
Phillip Jensen, P.E., Washington Department of Fish and Wildlife
Rich Johnson, Washington Department of Fish and Wildlife
Donald C. Ponder, P.E., Washington Department of Fish and Wildlife
Paul Sekulich; Washington Department of Fish and Wildlife
Padraic Smith, P.E., Washington Department of Fish and Wildlife
Tony Whiley, P.E., Washington Department of Fish and Wildlife

Technical Editing

The Demich Group

Graphic Design

Ellis Paguirigan Designs

Funding Provided By

Washington Department of Fish and Wildlife
Washington State Department of Natural Resources - Jobs for the Environment Program
Washington State Department of Transportation
Washington State Salmon Recovery Funding Board
U.S. Fish and Wildlife Service – National Conservation Training Center

Preface

Design of Road Culverts for Fish Passage is part of a series called the Aquatic Habitat Guidelines. The Aquatic Habitat Guidelines collection was created by a consortium of public agencies to assist property owners, planners, designers and regulators in protecting and restoring marine, freshwater and riparian fish and wildlife habitat. The agencies involved in developing this series include the Washington Department of Fish and Wildlife, the Washington State Department of Transportation, the Washington Department of Ecology, the U.S. Army Corps of Engineers and the U.S. Fish and Wildlife Service. The authors of the guidelines are widely recognized experts in their fields. The content and organization of information is based on a set of guiding principles developed by professional resource managers, engineers and other practitioners.

Each guideline is based on current best science and technical practice surveyed in topical state-of-the-knowledge white papers or a thorough literature search. Their content includes background science and literature; policy issues; site and vicinity environmental-assessment processes; project-design processes, standards and details; and case studies. Technical assistance materials produced under the Aquatic Habitat Guidelines program include documents in printed, compact-disc, and web-page format, as well as training and outreach workshops. You can obtain additional copies of this and other available guideline documents, downloadable versions of white papers, drafts of guidelines in development and other information about the Aquatic Habitat Guidelines on line by visiting www.wa.gov/wdfw/hab/ahg.

The overwhelming majority of Washington's fish and wildlife species depend on aquatic and riparian ecosystems for all or part of their life cycle. This rich and diverse fauna, and the flora on which they depend are irreplaceable elements of Washington's natural resources and are the basis for much of the state's cultural heritage, economy and quality of life. Unfortunately, in our enthusiasm for enjoying and developing land surrounding these aquatic habitats, we have destroyed, degraded and fragmented many of our most precious marine, freshwater and riparian ecosystems. Over time, these adverse impacts have resulted in the federal listing of many marine, freshwater and riparian animal species as "endangered" or "threatened" under the federal Endangered Species Act, and the state of Washington's wildlife protection legislation. Of particular note is the listing of several salmon species under the ESA.

In 1999, Governor Gary Locke and several Washington State agencies adopted a statewide strategy to protect and restore salmon habitat in the state. At the heart of the strategy is the hands-on involvement of landowners and other individuals. Incentives and technical assistance in salmon protection/recovery initiatives are included in the strategy to encourage such participation. In the 1999-2001 biennium, Washington State distributed nearly $50 million to more than 300 salmon protection/recovery projects sponsored by local governments, watershed groups, County Conservation Districts, Regional Fisheries Enhancement Groups, volunteer groups and individuals. For such involvement to be effective, there is an urgent need for increased technical guidance to ensure that these local efforts are strategic in approach, address the source of a problem and not just the symptoms, make the best use of limited funds and are based on the best available science that can be consistently and effectively applied across the landscape. The Aquatic Habitat Guidelines program is designed to help provide this technical assistance.

Each guideline in the Aquatic Habitat Guidelines series is designed in part to provide technical guidance supporting regulatory streamlining; however, it is important to remember that the information in these guidelines is not a substitute for the law. *Current local and state policies, rules and regulations supersede any and all recommendations made in these guidelines.*

The Aquatic Habitat Guidelines Program was created to:

- address habitat requirements and guide recovery projects for marine, freshwater and riparian animal species listed under the federal ESA;
- facilitate consistent application of good science and technical practice for project designs, construction and operations affecting aquatic systems;
- increase the success rate and enhance the worthwhile expenditure of public funds on protection and recovery projects;
- streamline and reduce costs for environmental review and permitting for activities that affect marine, freshwater and riparian ecosystems; and
- provide a single set of benchmarks for the evaluating and prioritizing projects affecting aquatic and riparian habitats.

To carry out such a mission, the program is designed to meet the following objectives:

- make the expertise of professional resource managers available to a wide variety of organizations and citizens who are seeking assistance in habitat protection and restoration activities;
- streamline local, state and federal regulatory review of activities involving aquatic environments by providing guidelines based on best available science;
- provide a scientific basis for any future changes to current local policies or activities associated with aquatic resource in the state; and
- maintain ongoing reviews and updates to the Aquatic Habitat Guidelines to reflect experience and emerging science and technical practice.

Guiding Principles

The Aquatic Habitat Guidelines Guiding Principles summarize current, scientific understanding about how ecosystems work, and they reflect current resource-agency policy and technical approaches to protect ecosystem functions. Documenting this scientific and technical understanding and policy will enable managers and project proponents to assess the effectiveness of the Aquatic Habitat Guidelines in their efforts to protect and restore salmonid habitats as well as other aquatic and riparian habitats. As scientific understanding improves through time, these guidelines will be updated to reflect the evolution of thought.

The guiding principles are organized from general concepts to topical statements. They were developed by the Aquatic Habitat Guidelines Steering Committee, whose membership includes the Washington Department of Fish and Wildlife, Washington State Department of Transportation and the Washington Department Ecology. Some of the principles were taken directly or expanded from other planning documents such as the Wild Salmonid Policy (Washington Department of Fish and Wildlife, 1997), the Statewide Strategy to Recover Salmon (State of Washington, 1999) and Coastal Salmon Conservation: Working Guidance for Comprehensive Salmon Restoration Initiatives on the Pacific Coast (National Marine Fisheries Service, 1996). Links to the websites containing these documents can be found at "Links and References" on the Washington Department of Fish and Wildlife's website at www.wa.gov/wdfw/hab/ahg.

Guiding Principles for General Ecosystem Function:

1. Ecological processes create and maintain habitat function. These processes include:

    - **Geomorphic processes** – the interaction of water, sediment and wood that creates channel and shoreline structure. Geomorphic processes include bank and bed erosion, channel migration and evolution, sedimentation, debris influences, erosion, accretion, sediment transport and fire.
    - **Biological processes** (e.g., nutrient cycling; species interactions; riparian and upland vegetation dynamics; and species-mediated, habitat-forming processes such as beaver activity).

    Salmon and other aquatic organisms have evolved and adapted to use the habitats created by these processes. The long-term survival of naturally occurring populations of these species depends on the continuation of these processes.

2. Ecological processes create and sustain a suite of ecosystem characteristics and functions that include:

    - ecosystem complexity, diversity and change;
    - ecological connectivity;
    - riparian interactions;
    - floodplain connectivity;
    - species diversity, adaptation and survival;
    - water quality and water quantity; and
    - invertebrate production and sustained food-web function.

3. These characteristics and functions have biological value as well as economic, social, cultural, educational and recreational values.

4. Because these characteristics and functions vary across and within watersheds, the use of local watershed information in planning and design will often lead to less risk of adverse project impacts. Natural processes that are protected and restored will minimize risk and provide sustainability to ecosystem functions.

This principle is paraphrased from the State of Washington (1999):

a. Maintain and restore the freedom of rivers and streams to move and change, especially during floods.

b. Allow time for natural regenerative processes to occur and provide recovery of river and stream integrity.

c. Protect the natural diversity of species and restore the natural diversity of habitats within river channels and riparian zones.

d. Support and foster habitat connectivity.

e. Tailor actions locally and to the whole watershed in the proper sequence of time and place. Match the system's potential and long-term human commitment to stewardship of the system.

The principle is also paraphrased from the National Marine Fisheries Service (1996):

a. To ensure no net loss of habitat functions and to enable natural processes to occur unimpeded, actions should benefit ecological functions. Actions that adversely affect habitat should be avoided.

b. Maintain habitats required for salmonids during all life stages from embryos and alevins through adults.

c. Maintain a well-dispersed network of high-quality refugia to serve as centers of population expansion.

d. Maintain connectivity between high-quality habitats to allow for reinvasion and population expansion.

e. Maintain genetic diversity.

General Guiding Principles for Project Planning and Implementation:

1. A holistic approach to project planning employs ecologically relevant units of management, such as watersheds.

2. Our limited understanding of ecological processes and engineered solutions is addressed by using the best available science and erring on the side of caution in project management, design, timing and construction.

3. A holistic approach to project planning recognizes and maintains geomorphic processes (e.g., channel migration, channel evolution, hydrologic changes, erosion, sedimentation, accretion and debris influences).

4. Appropriate uses of riparian, shoreline and floodplain systems through responsible land-use practices can maintain natural processes and avoid cumulative, adverse effects.

5. A holistic approach to compensatory mitigation and restoration is desirable; such an approach is based on local watershed conditions, and it strives to maintain or restore historical, ecological functions.

6. Compensatory mitigation for adverse impacts has risk and uncertainty of success. To minimize such risk and uncertainty, adverse impacts are first avoided and then minimized. Unavoidable, adverse impacts are addressed by compensating for losses.

7. Complete compensatory mitigation includes consideration of the project impacts over time (which usually extends beyond the completion of the project) and across the landscape (which often extends beyond the boundaries of the project).

8. Appropriate operating and maintenance procedures are necessary to ensure that project objectives are fulfilled and adverse environmental impacts are minimized.

9. Monitoring and adaptive management are critical components of restoration, mitigation and management activities.

Guiding Principles for Water Crossings:

1. Culverts result in permanent, direct loss of instream and riparian habitat.

2. Installation and maintenance of water crossings that confine or constrict the channel or floodplain will break ecological connectivity, alter channel processes and change adjacent channel character and shape by affecting the movement of debris, sediment, channel migration, flood waters, and aquatic and terrestrial organisms.

3. Water crossings may create an entry point for road-runoff pollutants.

4. Fish passage can be hindered or blocked at water crossings.

5. Water crossings increase the risk of damage to the downstream habitat due to water crossing failure.

6. Cumulative impacts and risks of water crossings can be avoided or minimized by consolidating water crossings; employing full-span bridges, by simulating a natural channel through culverts; or removing water crossings. Access solutions that do not require water crossings are preferred.

It is our nature as human beings to live, work and recreate along and adjacent to waterways, whether freshwater or marine. Our lives and histories are inextricably linked to water. How we affect those waterways has long-term survival consequences not only for fish and wildlife, but for humanity. The Aquatic Habitats Guidelines Program is intended to help balance man's need to protect life and livelihood with the need to protect and restore valuable habitat for fish, for wildlife and for ourselves.

Introduction

Design of Road Culverts for Fish Passage serves as guide for property owners and engineers who are designing permanent road-crossing culverts to facilitate upstream fish migration. It provides guidance for projects involving new culvert construction as well as retrofitting or replacing existing culverts. The designer will need to have a working knowledge of hydraulic engineering, hydrology and soils/structural engineering to accomplish an appropriate design.

Formal fish ladders may be required as a retrofit at some culvert sites to provide passage. The design of fish ladders is beyond the scope of this guideline, though there is a brief description of some basic design concepts included here. An engineer with expertise in fish passage should be consulted for additional assistance for the design of fish ladders.

Design of Road Culverts for Fish Passage lays out the consecutive design steps most likely to be required in a culvert project. A form describing the data needed for the design and its evaluation is provided in Appendix F, *Summary Forms for Fish-Passage Design Data.* Explanations and definitions of terms describing channel, hydrology and data requirements can also be found in Appendix F.

Before using this guideline, great care should be taken to determine whether a culvert is a suitable solution for providing fish passage at the particular site in question. Indeed, environmental circumstances other than fish passage may make it impossible to obtain a permit to install a culvert. The Washington Department of Fish and Wildlife prefers construction of a bridge over installation of a culvert in order to minimize risk of impacts to fish and habitat. Wherever a roadway crosses a stream, it creates some level of risk to fish passage, water quality or specific aquatic or riparian habitats. Generally, the risks increase the more the roadway confines and constricts the channel and floodplain. Any and all alternatives should be investigated to minimize the number of sites where a roadway crosses a stream, including designing road alignments to avoid crossings, consolidating crossings and using temporary crossing structures for short-term needs.

Though this guideline focuses on fish passage, other habitat and ecological considerations are also required in the siting and design of road-crossing structures such as culverts. These considerations are essential to the protection of fish and habitat, and should be addressed first in the design of a road crossing. Requirements addressing these considerations are outlined in Chapter 1, *Habitat Issues at Road Crossings*. The Washington Department of Fish and Wildlife's Area Habitat Biologist in the area where your project is located is the final authority for Hydraulic Project Approval, so be sure to make contact early on for information on fish passage and other environmental issues that go beyond fish passage (see Appendix J, *Washington Department of Fish and Wildlife Contact Information*).

For information about the inventory of culverts or the prioritization of culvert barrier remedies, refer to the *Fish Passage Barrier Assessment and Prioritization Manual,* published by the Washington Department of Fish and Wildlife (1998).

The design of new or retrofit culverts must be in compliance with Washington Department of Fish and Wildlife fish-passage criteria as defined by WAC 220-110-070 (see Appendix B, *Washington Culvert Regulation*). The information contained in this publication is the most current guidance for construction and retrofit of culverts for fish passage in Washington State. Recommendations in this publication vary somewhat from WAC 220-110-070 but do not conflict with it. *Design of Road Culverts for Fish Passage* is intended to clarify the regulation and provide up-to-date guidance and application of the regulation across a broader range of fish-passage projects, including steep culverts. These guidelines can be applied as provided for in WAC 220-110-032, "Modification of technical provisions." Information gathered, as well as concepts and guidance developed for this publication will be incorporated into any future review and update of WAC 220-110-070.

Chapter 1 – Habitat Issues at Road Crossings

The very presence of a culvert has an impact on stream habitat, even when fish are able to migrate through it successfully. These impacts are often associated with the culvert itself, but they can also be associated with the channel modifications necessary to install or retrofit a culvert intended to facilitate fish passage. Upstream and downstream hydraulic effects of the culvert can have an impact as well. There are, for example, often habitat losses associated with steepening a channel to achieve fish passage. What's more, though fish-passage criteria apply only to fish-bearing streams, other environmental factors apply at all crossings. For questions about habitat issues, contact the Washington Department of Fish and Wildlife's Area Habitat Biologist (see Appendix J, *Washington Department of Fish and Wildlife Contact Information*).

Because the impact to stream habitat can be significant, the best option for roadway design is to avoid or minimize the number of stream crossings needed. However, this is not always feasible, so other options must be considered that will allow the stream to cross the road. **Figure 1-1** presents a generalized approach to selecting road-crossing options. As you can see, it explores options other than permanent culverts and addresses habitat issues that may arise before considering the formal culvert-design process.

Figure 1-1. Road Crossing Design Process

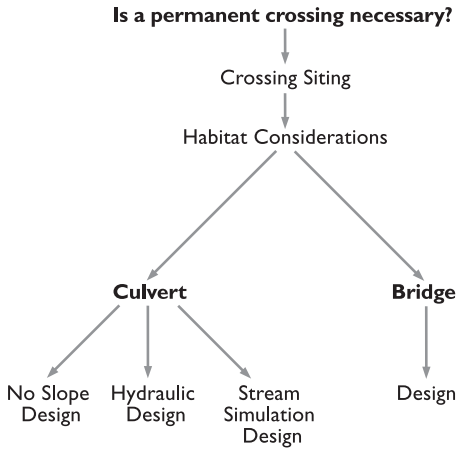

A generalized approach to selecting road-crossing options.

Once the culvert option has been selected, a number of concerns must be taken into account as design begins. These concerns may dictate the siting, sizing and design of culverts and/or fish passage improvements:

- direct habitat loss,
- water quality,
- upstream and downstream channel impacts,
- ecological connectivity,
- channel maintenance,
- construction impacts, and
- risk of culvert failure.

Direct Habitat Loss

Salmonid habitat includes all areas of the aquatic environment where the fish spawn, grow, feed and migrate. Culvert installations require some magnitude of construction activity within the stream channel, and the culvert itself replaces native streambed material and diversity with the culvert structure.

Spawning Habitat

Each species of salmon and trout require specific spawning conditions related to the water velocity, depth, substrate size, gradient, accessibility and space. All salmonids require cool, clean water in which to spawn. Most salmonid spawning occurs in pool tailouts and runs. Spawning habitat can be lost or degraded by culvert installations in the following ways:

- Culvert placement in a spawning area replaces the natural gravel used for spawning with a pipe. This is a direct loss of spawning habitat.
- Culvert construction can require significant channel realignment, eliminating natural meanders, bends, spawning riffles and other diversity in the channel that serve as valuable habitat.
- Culverts shorten channels, leading to increased velocities and bed instability that reduce spawning opportunities and decrease egg survival.
- Riffles and gravel bars immediately downstream of the culvert can be scoured if flow velocity is increased through the culvert. Gravel mobilization while eggs are incubating in redds (nests) results in high egg mortality.

- Any release of sediment into the stream may smother spawning gravel with silt. In the case of culverts, sediment releases may be due to construction or due to a change in hydraulics caused by changes to the alignment, siting or design of the culvert. Such damage can be avoided or at least minimized by correctly designing and implementing an effective erosion- and sediment-control plan and by timing the project to avoid critical stages in salmonid life cycles. Instream work windows vary among fish species and streams. Contact the Washington Department of Fish and Wildlife's Area Habitat Biologist for information on work windows (see Appendix J).

Rearing Habitat

Juvenile salmonids use almost all segments of the stream environment during some stage of their freshwater residence. Habitat usage is highly variable depending upon the species, life stage and time of year. Pools with large woody debris are especially valuable habitat. Trees on the streambank also provide important habitat features, serving as cover and a source of insects and large woody material, both of which critical to rearing fish. Culvert construction can negatively impact rearing habitat in the following ways:

- There is a direct loss of rearing habitat when it is replaced with a pipe.
- Trees and woody debris at the culvert site must be removed to install the culvert, thus eliminating their beneficial effects on channel structure, function, stability and food production.
- Riparian vegetation must be removed from the streambank to make way for the culvert installation, and it is often removed for the entire right-of-way width as a regular maintenance activity.
- Any reduction in stream length is a reduction in usable rearing habitat. Culverts cut off natural bends, meanders, side channels and backwater channels, directly eliminating such habitat. Most side channels and backwater channels experience higher fish usage than the main stream channel, especially during winter flood flows, so the loss of such habitat can be especially harmful to fish survival.
- Culvert placement that lowers the natural water level of pools, ponds, backwaters or wetlands within or adjacent to the stream can significantly decrease valuable rearing habitat.

Loss of Food Production

Fish, like all other organisms, need food in order to survive, grow and reproduce. Juvenile salmonids feed on aquatic invertebrates and terrestrial insects that fall into the water. The food chain in the aquatic environment begins with the primary producers like algae and diatoms (periphyton), which require organic material and sunlight to fuel the photosynthetic process. The inside of a culvert is dark, and the absence of sunlight prohibits primary production. Benthic invertebrates like mayflies, stoneflies and caddis flies feed on the primary producers. Invertebrates require some of the same conditions as salmonids to thrive, including clean water and stable gravel. Reduction in the number of invertebrates means a reduction in an important food source for salmonids, which can reduce salmonid growth rates. Faster growth rates produce larger salmonids – a competitive advantage that increases their survival rate at sea.

Removal of riparian vegetation for culvert placement reduces organic debris such as leaves, wood, bark, flowers and fruit that enters the stream and fuels primary production. Terrestrial insects that drop from overhanging vegetation into the water are removed from the food base when the vegetation is lost.

Mitigation of Direct Habitat Losses

Complete replacement of habitat and channel length lost due to culvert installation can be difficult, if not impossible. Mitigation then becomes the next option. Mitigation for the impact of lost cover and pools might include adding diversity and habitat features such as woody debris to the channel in an appropriate location.

As mentioned earlier, placement of a culvert in a spawning area results in a direct loss of that habitat for fish, but invertebrates are also affected because they, too, spawn in gravel beds. Spawning habitat in most Pacific Northwest streams is not limited by the supply of gravel; it is limited by the structure and diversity of channel forms that sort and distribute bed material to create spawning and other habitats. The only effective means of preserving valuable spawning habitat in most cases is to avoid disturbing it in the first place.

In streams that are deficient in spawning gravel, a loss of spawning habitat might be mitigated off site by gravel supplementation. Several techniques might be used.

While it may be tempting to simply place new gravel over an existing streambed inside or outside of a culvert, it is normally not effective to do so in the short term. The new gravel is, of course, attractive to fish for spawning, but it's not stable

enough for eggs to survive winter floods. It takes several high flows for gravel to be redistributed and settle into place before it can be valuable habitat.

Gravel supplementation should instead be done in a way that mimics natural gravel deposits such as pool tailouts or gravel banks. The downstream end of stable pools and stable riffles can be supplemented with a layer of gravel to mimic tailout deposits. Gravel can be placed upstream of streambed controls that are installed as part of the fish-passage project. A channel constriction made of mounds of gravel will, in the right circumstances, create a pool and a tailout. Gravel can also be supplied to a bankline to mimic a naturally eroding gravel bank. High stream flows will then efficiently redistribute the gravel to locations where it is most likely to remain stable.

It may seem reasonable to add a layer of gravel inside steeper culverts to mimic the streambed at either end. However, if the gravel layer is too thick, low water flows may not be able to rise above the gravel, and fish will not be able to swim through. This problem can be especially troublesome when there is no input of bedload from upstream to seal the gravels, such as when there is a wetland or pond immediately above the culvert or in spring-fed streams with stable hydrology.

Water Quality

To extend the life span of culverts in acidic water, they are sometimes treated with an asphalt coating. It is unknown what affect this may have on fish or invertebrates in the water. Until it can be shown that these type of treatments are not a risk to fish health they should not be used.

Quality and quantity of road stormwater runoff must be mitigated as deemed appropriate by the local jurisdiction or the Washington State Department of Ecology. In addition, all stormwater discharges into a stream must be designed to prevent scour during higher flows.

Upstream and Downstream Channel Impacts

Increased velocity from a culvert can erode downstream banks, leading to the need for bank protection. To reduce the likelihood of downstream erosion, flow velocity at the culvert exit should not exceed the preproject channel velocity by more than 25 percent.

Undersized culverts create bed instability upstream. At high flows, the culvert creates a backwater, and bed material is deposited in the channel upstream. With receding flows, the bed and/or banks erode through or around the deposition. The result is either a chronically unstable channel bed or increased bank erosion and the need for bank clearing and protection. The culvert inlet should be designed to limit head loss to less than one foot for a 10-year flood. Less head loss may be necessary considering flood impacts.

The design process described in this guideline helps minimize these upstream and downstream impacts. Typically, this process determines the size and elevation of culverts such that velocities leaving the culvert will not be excessive. Sites with banks or beds susceptible to erosion may require special consideration.

A culvert placed in a stream with an actively migrating channel can result in an acceleration of the channel migration and a substantial maintenance effort to keep the channel at the culvert location. Channel migration is a natural, geomorphic process, but upstream activities can accelerate it. Chapter 7, *Channel Profile* discusses how to anticipate and address those impacts.

Ecological Connectivity

Ecological Connectivity is the capacity of a landscape to support the movement of organisms, materials or energy.[1] In terms of culvert design, it is the linkage of organisms and processes between upstream and downstream channel reaches. The health of fish populations ultimately relies on the health of their ecosystems, which include migrations and processes that depend on that connectivity. Biotic linkages might include upstream and/or downstream movement of mammals and birds, nontargeted fish species, and the upstream flight and downstream drift of insects. Physical processes include the movement and distribution of debris and sediment and the shifting of channel patterns. Some of these functions may be blocked by road fills and culverts that are too small in relation to the stream corridor.

Debris and bed material should be managed by allowing them to pass unhindered through the culvert. When debris is trapped, fish-passage barriers are created; the debris is not passed to the channel downstream, and a backwater is created upstream that extends the negative effect of the culvert. While the size of the culvert developed by the design processes described in this guideline will normally be adequate to pass most debris and bed material, there may be special cases where the culvert size should be increased to avoid capturing debris. Additionally, the Hydraulic Design Option discussed later in this guideline may undersize the culvert for debris, so a factor of safety must be applied.

Trash racks and multiple, parallel, culvert pipes are generally not acceptable because they trap debris, create barriers to fish migration and increase the risk of culvert failure. In the case of low road profiles, raising the road elevation should be considered as an alternative to multiple culverts.

Debris racks might be a reasonable, temporary solution in special cases, if an existing culvert has a high risk of debris plugging and there is a clear responsibility and committed schedule for replacing the culvert. The debris rack for this situation should be mounted high on the culvert, above the ordinary high water mark. The space below it is left open for typical flows. The rack itself is only functional at high flows when debris is moving. Openings within the bar rack should be no smaller than nine inches. A specific monitoring and maintenance plan should be developed for any debris rack, and convenient access must be provided for these activities.

Ecological connectivity issues are difficult to quantify and generalize, but they may ultimately be significant to the health of aquatic ecosystems. More development of the concept of ecological connectivity in relation to road culverts is expected and encouraged.

Channel Maintenance

Other than fish passage, the need for channel maintenance created by poor siting of road crossings and culverts is the greatest impact culverts have on aquatic habitats. Highways are often placed at the fringe of river floodplains and must, therefore, cross the alluvial fans of small streams entering the floodplain. As each stream enters the relatively flat floodplain, a natural deposition zone is created, and the channel is prone to excursions and avulsions across its alluvial fan. Culverts placed in these locations tend to fill with bed material. To keep the culvert from plugging and the water overtopping the road, periodic (in some cases as frequently as annually) channel dredging becomes necessary. Bed-material removal is a major cause of channel instability and loss of spawning and rearing habitat for some distance upstream and downstream. It also has an ecological-connectivity impact by blocking bed material and the aggrading-channel process from migrating throughout the reach.

Mitigation for these channel-maintenance impacts includes installing a bridge or a culvert large enough that the aggradation and channel-evolution processes can continue. A bedload sump might be useful in some situations to localize the dredging needed at existing culverts and even eliminate the upstream impacts of dredging. (Information on the design of such sediment traps can be found in the upcoming Washington Department of Fish and Wildlife document, *Stream Habitat Restoration Guidelines*.) If relocating the road is possible, it is normally considered a superior alternative.

Construction Impacts

Construction impacts might include the release of sediment or pollutants, temporary fish-passage barrier during construction, removal of bankline vegetation, blocking of the flow or stranding of fish. Provisions in WAC 220-110-070 address these issues by way of construction timing, water-quality management, erosion- and sediment-control planning, and revegetation. Construction plans submitted for Hydraulic Project Approval should include, in addition to plans and specifications, an erosion- and sediment-control plan covering these items. The provisions of WAC 220-110-070 may be modified for specific projects.

Risk of Culvert Failure

Structural failure of culverts can cause long-term, extensive and massive damage to habitat. Failures can be a result of inadequate design, poor construction, beaver damming, deterioration of the structure or extreme natural events. Risk of failure can be minimized by sizing the culvert to accommodate extreme flow events and debris. This may include appropriate inlet and/or outlet armoring and the use of proper backfill and compaction techniques during construction.

In some cases, fords or alternative road overflow points may be useful. This should be considered along forest roads that are susceptible to debris flows or along roads that cross alluvial fans (for guidelines on ford design, contact WDFW for Technical Assistance).

Chapter 2 – Fish Barriers at Culverts

The parameters provided in WAC 220-110-070 serve as the technical definition of a fish-passage barrier and the basis for fish-passage design. Some level of barrier is assumed to be present when the criteria are not achieved. The regulation is included in Appendix B, *Washington Culvert Regulation.*

Barriers block the use of the upper watershed, which is often the most productive spawning habitat, considering channel size, substrate and available rearing habitats. Fish access to upper portions of the watershed is important; fry produced there then have access to the entire downstream watershed for rearing. *Complete* barriers block all fish migration at all flows. *Temporal* barriers block migration some of the time and result in loss of production by the delay they cause (anadromous salmonids survive only a limited amount of time in fresh water, and a delay can limit egg distribution or cause mortality). *Partial* barriers block smaller or weaker fish within a species and limit the genetic diversity that is essential for a robust population. Fish-passage criteria accommodate weaker individuals of target species including, in some cases, juvenile fish.

There are five common conditions at culverts that create migration barriers:

- excess drop at the culvert outlet,
- high velocity within the culvert barrel,
- inadequate depth within the culvert barrel,
- turbulence within the culvert, and
- debris and sediment accumulation at the culvert inlet or internally.

The interior surface of a culvert is usually designed to optimize water passage; it does not have the roughness and complexity needed to slow down the flow that a streambed does. Instead, the culvert concentrates and dissipates energy in the form of increased velocity, turbulence or downstream channel scour are the most prevalent blockages at culverts.

A culvert is a rigid boundary set into a dynamic stream environment. As the natural stream channel changes, especially with changes in hydrology due to land use changes, culverts often are not able to accommodate those changes. Instead, they become barriers to fish passage.

Fish-passage barriers at culverts can be the result of improper design or installation, or they may be the result of subsequent changes to the channel. Fish-passage barriers are very often the result of degrading channels, leaving the culvert perched above the downstream channel. Changes in hydrology due to urbanization are a common cause of channel degradation. Fish-passage barriers are also caused by scour-pool development at the culvert outlet. The scour pool may be good habitat in itself but it moves the backwater control of the downstream channel further downstream and creates a drop at the outlet. The presence of large scour pools at a culvert outlet and/or midchannel gravel bars upstream of the culvert are often indicators that a velocity barrier for fish exists inside the culvert at high flows.

All fish-passage structures require some level of maintenance. Adult fish typically migrate during the high flow seasons and in response to freshets. Timely inspections and maintenance during inclement weather are necessary at all facilities. When culverts are not adequately inspected and maintained, fish-passage barriers can form. The maintenance done at a culvert for the purpose of high-flow capacity is often different than what is required for fish passage. For example, debris that is plugging slots in baffles for example may not affect the flow capacity of a culvert, but it may block fish from passing through. More than a cursory inspection of the culvert inlet and outlet is necessary for an adequate fish-passage maintenance program.

Many fish-passage barriers that occur at high stream flows are not apparent during low and normal stream flows. For a complete fish-passage assessment, culverts must be analyzed at both the low and high fish-passage design flows. Definition and selection of design flows are discussed in this guideline. The Washington Department of Fish and Wildlife has developed a spreadsheet to determine if a culvert meets the criteria in WAC 220-110-070. The spreadsheet can be found in the ***Fish Passage Barrier and Surface Water Diversion Screening Assessment and Prioritization Manual,*** published by the department and available at www.wa.gov/wdfw/hab/engineer/fishbarr.htm. The manual provides guidance on how to locate, assess and prioritize fish-passage problems (e.g., culverts, dams, fishways) and problems associated with surface-water diversion screens.

Chapter 3 – Culvert Design For Fish Passage

Many road crossings in Washington State have been designed or retrofitted to provide fish passage. The experience of observing and monitoring such sites, together with research on fish migration behaviors and swimming capabilities, has led to several straightforward design procedures outlined in this guideline. Chapter 1, *Habitat Issues at Road Crossings* described the first step in the design process, which involves becoming aware of the potential habitat issues that arise when roadways cross streams. Chapter 2, *Fish Barriers at Culverts,* identified some of the concerns to be addressed if culverts are to be used to convey a stream through a roadway crossing. This chapter and the rest of this guideline describe how to design a culvert to provide fish passage. A general flow chart of the culvert-design process for fish passage is shown in **Figure 3-1**.

Figure 3-1. Culvert Design for Fish Passage

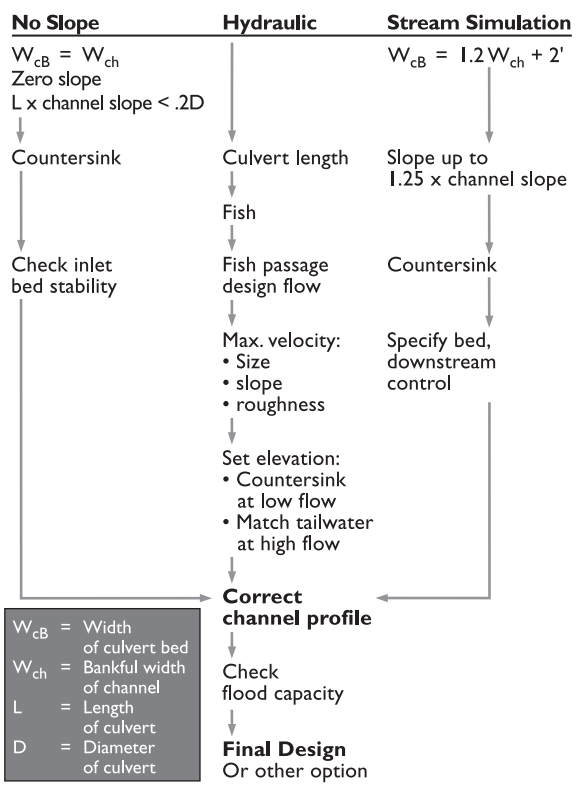

A general flow chart of the culvert design process.

Design of Road Culverts for Fish Passage provides specific guidance to satisfy state regulations and to cover additional situations that exceed those defined by regulations. The criteria provided here are not absolute; however, if they cannot be achieved for a specific project, then other road-crossing means should be considered instead. Such options may include installing a temporary culvert, rerouting the road to eliminate the stream crossing or constructing a bridge. Variances to some design criteria can be approved if adequate justification is provided.

Recent experience in western Washington has shown that about 25 percent of fish-passage barriers at culverts have required full replacement of the culvert. Some of these replacements have been accomplished by boring new culverts through high road fills. About five percent have required replacement of the culvert with a bridge or abandonment of the roadway. These percentages will likely change as more culvert barriers are fixed in low-gradient areas and projects move upstream to higher-gradient reaches.

When culverts are the solution of choice, effective fish passage can often be provided through the proper determination of culvert slope, size, elevation and roughness. Constructing formal structures and allowing the upstream channel to regrade to a steeper gradient can also be useful. Fish-passage construction at low-gradient sites can usually be limited to within 100 feet or less of the channel length outside the culvert; construction at steeper sites may extend further upstream and downstream from the culvert, or it may require formal fish ladders or full culvert removal.

The determination of adequate fish passage at a culvert is based on criteria described in WAC 220-110-070. This regulation describes two different approaches for ensuring fish passage:

1. the No-Slope Design Option, and
2. the Hydraulic Design Option.

A third option is also acceptable; it is the Stream-Simulation Design Option, in which an artificial stream channel is constructed inside the culvert.

The No-Slope Design Option results in reasonably sized culverts without requiring much in the way of calculations. The *Hydraulic Design Option* requires hydrologic and open-channel hydraulic calculations, but it usually results in smaller culverts being required than the No-Slope Design Option. (Smaller culverts may trap more debris; however, so a factor of safety must be applied.) The Hydraulic Design Option is based on velocity, depth and maximum-turbulence requirements for a target species and age class. The *Stream-Simulation Design Option* involves constructing an artificial stream channel inside the culvert, thereby providing passage for any fish that would be migrating through the reach.

It is difficult in most situations, if not impossible, to comply with velocity criteria for juvenile fish passage using the Hydraulic Design Option. The No-Slope and Stream-Simulation Design options, on the other hand, are assumed to be satisfactory for adult and juvenile passage; thus, they tend to be used more frequently at sites where juvenile fish passage is required. Application of the No-Slope Design Option is most effective for relatively short culverts at low-gradient sites.

Road-Crossing Siting

Fish-passage barriers and the cumulative habitat loss caused by culverts can be reduced in part by properly citing the culvert and by minimizing the number of road crossings. Both the siting of culverts and the land-use planning that creates the need for the culverts are important.

Culvert Siting

The goal in siting a culvert is to make the culvert as short as possible without deviating from the direction of the upstream and downstream channel course by more than 30 degrees. A culvert that mimics the exact course of a stream may be long enough to become a fish-passage barrier. On the other hand, a culvert made shorter by deviating the course of the stream at an extreme angle (greater than 30 degrees to the channel) will reduce the success of fish passage by increasing inlet contraction and turbulence at high flows. Increased contraction also makes the culvert less efficient for flood capacity and sediment transport. In-channel deposition and bank scour often occur upstream of culverts with excess skew. When the culvert is skewed relative to the downstream channel and the culvert outlet is not directed at the channel alignment, there is an increased risk of bank erosion.

It's also important to anticipate potential natural lateral migration or vertical changes of the channel when siting a culvert. The installation of a culvert fixes a section of the channel rigidly in place. If a stream is naturally unstable and/or is migrating across a floodplain, the rigidity of the culvert may exacerbate the stream's instability, accelerate the stream's migration rate or make the stream's migration become more pronounced and chaotic. Channels naturally move vertically over time. Instabilities may occur in which the channel bed continues to aggrade (rise) or degrade (incise) over long periods of time. A channel may also fluctuate in elevation in response to floods. Long-term or short-term channel changes must be accommodated in culvert design. If they can't be accommodated, other solutions, such as a bridge or an alternative road alignment, may be more appropriate.

Land-Use Planning

Many new stream crossings can be avoided (or at least the number required can be reduced) through proper land-use planning. Even the best of fish-passage design has the potential to become a fish-passage barrier. The way local jurisdictions prepare and implement land-use plans and critical-areas ordinances has a direct influence on fish-passage success by distributing land uses and the transportation systems necessary to support them. For example, if a county fails to allocate forest or agricultural land, applying instead a very dense pattern of urban, suburban or rural residential land uses, one can expect many stream crossings to be required. This would not be the case if less dense and intense land uses, such as forestry or agriculture, were coupled with a combination of compact, urban growth areas and large, rural parcels.

In addition to the number of road crossings, changes in hydrology and riparian areas due to dense urbanization also affect fish passage. These changes cause channel incision and channel simplification that often leave culverts perched above the downstream channel, forming barriers to fish migration. Other likely impacts are sediment and temperature impacts. With these changes, the only adequate habitat left is confined to areas upstream of the urbanization, making downstream fish-passage barriers even more damaging to fish production.

Fish passage is not the only habitat concern created by the improper design of fish culverts. These concerns are described in detail in Chapter 1.

Bridges

Where the design process leads away from a culvert as a viable crossing structure, a bridge should be considered. This is particularly the case where the stream width exceeds 20 feet or stream slope is greater than about six percent, or when the movement of large debris is frequent. Crossings that are subject to debris flows need special consideration. Alternatives in such a situation include fords, temporary bridges, bridges with high clearance and moving the road to where its crossing is less problematic.

While general considerations regarding the use of bridges at crossings are discussed in this guideline, their actual design is not addressed. An experienced bridge design engineer is required for such an undertaking.

For the purpose of this guideline, a bridge is any crossing that has separate structural elements for the span and its abutments. Unencumbered by the dimensional limitations of culverts, a bridge can be large enough that the structure does not significantly affect the flood hydraulic profile. Piers and abutments can be drilled or buried deeply enough that there is very little risk of failure.

Like culverts, however, bridge designs must also comply with regulations; in this case, regulations addressing water crossings and the creation of new channels (WAC 220-110-070 and 220-110-080). And, just as in the case of culverts, bridge design must begin with considerations for habitat impact. Properly designed bridges are superior to culverts in terms of habitat preservation and restoration; however, mitigation measures may still be necessary to compensate for impacts from construction, bank armoring or other habitat losses caused by the presence of the bridge.

The channel created or restored beneath the bridge must have a gradient, width, floodplain and configuration similar to the existing natural channel upstream or downstream of the crossing. Where possible, habitat components normally present in these channels should also be included. In high-gradient situations, the stream-simulation width criteria (see Chapter 6, *Stream-Simulation Design Option*) may be used to determine channel width under the bridge.

Bridge-span calculations should begin with a consideration of required channel width and floodplain requirements and proceed to side-slope and abutment allowances to arrive at the correct bridge-span dimensions. The side slopes up to the abutments should be placed at an angle that leads to natural stability. Large riprap retaining walls that encroach on the channel should be avoided.

WAC 220-110-070 states that abutments, piers, piling, sills, approach fills, etc., shall not constrict the flow so as to cause any appreciable increase (not to exceed 0.2 feet) in backwater elevation (calculated at the 100-year flood) or channelwide scour and shall be aligned to cause the least effect on the hydraulics of the water course. The purpose of that criteria is to limit the effect of the bridge on the upstream channel, especially in channels with significant gravel bedload.

When an undersized culvert is removed and replaced with a bridge, some upstream channel instability is likely. This can be due to stored sediment above the culvert and/or channel incision below the culvert. The result is excessive drop through the area of the crossing. The designer should carefully consider the channel headcut and regrade factors (see the discussion addressing channel regrade in Chapter 7, *Channel Profile*). Some sort of grade control, temporary or permanent, may be necessary to ensure channel and habitat integrity.

Chapter 4 – No-Slope Design Option

Description and Application

Successful fish passage can be expected if the culvert is sufficiently large and is installed flat, allowing the natural movement of bedload to form a stable bed inside the culvert. The No-Slope Design Option creates just such a scenario. A no-slope culvert is defined by the following characteristics:

- width equal to or greater than the average channel bed width at the elevation the culvert meets the streambed,
- a flat gradient,
- the downstream invert is countersunk below the channel bed by a minimum of 20 percent of the culvert diameter or rise,
- the upstream invert is countersunk below the channel bed by a maximum of 40 percent of the culvert diameter or rise,
- the possibility of upstream headcut has been taken into account, and
- there is adequate flood capacity.

The No-Slope Design Option is usually applicable in the following situations:

- new and replacement culvert installations,
- simple installations,
- low to moderate natural channel gradient or culvert length (generally < 3% slope), and
- passage is needed for all species.

The No-Slope Design Option can only be applied to culvert replacements and new culvert installations. It does not apply to retrofits. No special design expertise or survey information is required for no-slope culvert designs; and, if velocities are sufficiently low to allow a bed to deposit in the culvert, it is assumed that a broad range of fish species and sizes will be able to move through the culvert. In some cases, channel morphological features such as gravel bars and even a thalweg may form inside the culvert. Although culverts installed using the No-Slope Design Option are typically larger than culverts designed using the hydraulic option, the advantage to the culvert owner is the avoidance of additional surveying and engineering costs required by other design options. Combining the requirements of countersinking the outlet and the culvert width for a circular culvert, the diameter must be at least 1.25 times the channel bed width. The primary advantage of this option to the culvert owner is the avoidance of additional surveying and engineering costs required for other options.

Information needed for the No-Slope Design Option includes:

- the average natural channel-bed width,
- the natural channel slope,
- the elevation of the natural channel bed at the culvert outlet, and
- the evaluation of potential headcut impacts upstream of the culvert.

The first three of these parameters are described, together with standards for their measurement, in Appendix F, *Summary Forms for Fish-Passage Design Data*. The most reliable parameter for bed width in alluvial channels is the distance between channel bankfull elevations. Channel bankfull elevation is the point where incipient floodplain overbank flow occurs. For design purposes, use the average of at least three typical widths, both upstream and downstream of the culvert. Measure widths that describe normal conditions at straight channel sections between bends and outside the influence of any culvert or other artificial or unique channel constrictions. According to WAC 220-110-070, the channel-bed width can also be derived using the area below the ordinary high water mark as the bed definition. However, ordinary high water marks are often difficult to ascertain and are, therefore, often disputed. Ordinary high water marks are less related to physical channel processes, so they are less relevant to culvert design than the channel bankfull width. Appendix H, *Measuring Channel-Bed Width*, provides guidance on selecting and measuring channel width for design purposes.

If a culvert is being replaced, the estimate of future channel elevation and slope are critical parameters to the design. If the existing culvert is either perched or undersized, it will affect the local channel slope, width and elevation. Additionally, a surveyed profile of the channel will be required where it has been affected by the existing culvert. The profile is used to predict the natural channel slope and elevation at the culvert site by interpolating from unaffected conditions upstream and downstream.

A word of caution in using the No-Slope Design Option: the downstream channel profile may have to be steepened in situations where it has been scoured due to an undersized culvert. That steepened channel may become buried eventually as the channel aggrades upstream. Assuming the culvert is large enough to not create a constriction, a sloping channel will develop inside the culvert even though the culvert itself is placed flat. The result of this is the upstream end of the culvert will have a higher bed and less cross-section open area than the downstream end. Longer culverts in steeper channels under this option will result in less open area at the upstream end.

A reasonable upper limit of the No-Slope Design Option is to use it at sites where the product of the channel slope (ft/ft) and the culvert length (ft) does not exceed 20 percent of the culvert diameter or rise. It should be noted that this limitation can be overcome by understanding and accounting for the implications of constricting the upstream end of the culvert with the accreted bed or by installing a larger culvert. Any culvert shape can be used (round, pipe-arch or elliptical), but it must be countersunk a minimum of 20 percent at the downstream end and a maximum of 40 percent at the upstream end (see **Figure 4-1**). Using a round pipe provides sufficient width and additional vertical clearance.

Figure 4-1. No Slope Option

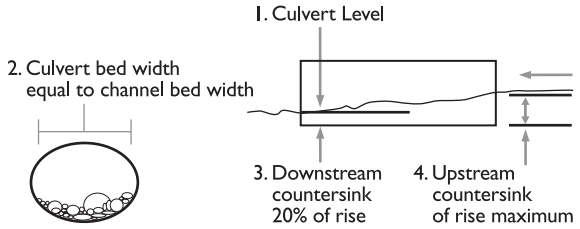

Therefore limited to SxL less than or equal to 0.2D

The culvert must be countersunk a minimum of 20 percent at the downstream end and a maximum of 40 percent at the upstream end.

The No-Slope Design Option is, therefore, limited by slope and length. If a site does not comply with this limitation, the size of the culvert diameter (D) can be increased; the slope (S) can be decreased, or another design option should be used.

Channel Profile, Flood Capacity and Other Considerations

The design of a new or replacement culvert mitigates for future design flows as land uses change. Issues of channel profile, flood capacity and other considerations are addressed throughout this guideline.

Chapter 5 – Hydraulic Design Option

Description and Application

The second design option provided in WAC 220-110-070 (see Appendix B, *Washington Culvert Regulation*) is based on the swimming abilities of a target fish species and age class. The Hydraulic Design Option can be applied to retrofits of existing culverts as well as to the design of new or replacement culverts. Hydraulic, open-channel flow and hydrologic computations, as well as specific site data are required for this option.

Generally, the Hydraulic Design Option might be applied in the following situations:

- new, replacement and retrofit culvert installations;
- low to moderate culvert slope without baffles;
- moderate culvert slope with baffles (as retrofit); and
- target species have been identified for passage.

Engineering design expertise, hydrology and survey information are required for this design option.

Historically, the Hydraulic Design Option has been the standard engineering method for designing fish passage at culverts. It is no longer the preferred method, however. In fact, it is not even allowed in many cases. The option is included here because it does apply to temporary retrofits of existing barrier culverts where replacement of the culvert can not occur in the near future. The method has limitations of culvert slopes; other design methods tend to provide less costly and more reliable designs in steep channels, and the Hydraulic Design Option targets distinct species of fish. It does not account for the ecosystem requirements of nontarget species. Additionally, there are significant errors associated with estimation of hydrology and fish swimming speeds; however, they can be resolved by making conservative assumptions in the design process. Situations in which the Hydraulic Design Option is most likely to be acceptable are temporary retrofit installations.

The fish-passage design process for the Hydraulic Design Option is reversed from the typical engineering orientation of culvert design for flood flows. Design considerations begin in the channel *below* the culvert and proceed in the upstream direction through the culvert; the direction of fish passage. In other words, think like a fish. Culverts designed for fish passage normally result in outlet-control conditions at all fish-passage flows. The inlet-control analysis must then be done to verify adequate culvert capacity for the high structural flow. Fish-passage criteria will usually control culvert design; flood-passage criteria are normally less stringent.

Proper culvert design must simultaneously consider the hydraulic effects of culvert size, slope, material and elevation to create depths, velocities and a hydraulic profile suitable for fish swimming abilities. It must be understood that there are consequences to every assumption; adequate information allows optimum design. The following sequence of steps is suggested for the Hydraulic Design Option for fish passage through culverts:

1. **Length of Culvert:** Find the culvert length based on geometry of the road fill.

2. **Fish-Passage Requirements:** Determine target species, sizes and swimming capabilities of fish requiring passage. Species and size of fish determine velocity criteria. Allowable maximum velocity depends upon species and length of culvert.

3. **Hydrology:** Determine the fish-passage design flows at which the fish-passage criteria must be satisfied.

4. **Velocity and Depth:** Find size, shape, roughness and slope of culvert to satisfy velocity criteria, assuming open channel flow and no bed material. Verify that the flow is subcritical throughout the range of fish-passage flows.

5. **Channel-Backwater Depth:** Determine the backwater elevation at the culvert outlet for fish passage at both low and high fish-passage design-flow conditions.

6. **Culvert Elevation:** Set the culvert elevation so the low and high flows for channel backwater are at least as high as the water surface in the culvert.

7. **Flood-Flow Capacity:** Verify that the flood-flow capacity of the culvert is adequate.

8. **Channel Profile:** If necessary, adjust the upstream and/or downstream channel profiles to match the culvert elevation.

Several iterations of Steps 4 through 8 may be required to achieve the optimum design. The following sections describe each of the design steps in more detail.

Length of Culvert

The Hydraulic Design Option is based on the maximum water velocity that target fish species are able to swim against as they negotiate the full length of the culvert. The longer the culvert, the lower the maximum allowable velocity. Determine the overall length of the culvert. Include aprons in the length, unless they are countersunk below the invert of the culvert. The length can be minimized by adding headwalls to each end of the culvert, by narrowing the road or by steepening the fill embankments.

Fish-Passage Requirements

Species and Size of Fish

The Hydraulic Design Option creates hydraulic conditions through the culvert that accommodate the swimming ability and migration timing of target species and sizes of fish (see **Figure 5-1**). Fish-passage design is based on the weakest species or size of fish requiring passage and is intended to accommodate the weakest individuals within that group. The types of species that are potentially present and the time of year when they are present can be obtained by contacting the Washington Department of Fish and Wildlife Area Habitat Biologist or Regional Fish Biologist (see Appendix J, *Washington Department of Fish and Wildlife Contact Information*).

The passage of adult trout as small as six inches in fork length (150 mm) is a design requirement in most areas of Washington State. It is assumed to be a requirement at each site unless it can be shown that, by distribution of species or habitat, it is not justified. Upstream migration of juvenile salmonids (50- to 120-mm salmon and steelhead) can also be important at many sites, depending upon the species present and the habitat distribution within the basin or reach. These fish are small and weak; therefore they require a very low passage velocity and a low level of turbulence. Unfortunately, the Hydraulic Design Option cannot usually satisfy the limitations of very low velocity and turbulence. It is, therefore, not generally practical to use the Hydraulic Design Option for juvenile fish passage. Instead, either the No-Slope Design Option or the Stream-Simulation Design Option may be more appropriate. Juvenile fish passage may not be necessary in every situation; the biological needs at the site should be clearly stipulated by qualified biological experts before a design is attempted specifically for juvenile fish. A culvert specifically designed by the Hydraulic Design Option for six-inch trout is expected to also provide passage for juvenile salmonids. If the hydraulic characteristics necessary for adult trout passage are achieved during peak flows, it is assumed that adequate juvenile passage is provided at lesser flows. Hydraulic conditions conducive to trout passage will result in bed-material deposition and a natural, roughened channel through the culvert, which juvenile fish can successfully use for passage.

It is believed that juvenile fish can tolerate some delay; and, because of their normal migration timing, they will be subjected to less severe hydraulic conditions than adult migrants. An exception to the presumption of stable bed formation for juvenile fish passage might occur in situations where a pipe becomes deeply submerged and pressurized during an extreme flood event and bed material is therefore scoured from it. Until new bed material is recruited into the culvert, there may be a barrier to weaker-swimming fish.

The use of adult trout as a conservative default condition may not apply to fishway design, since passage through the fishway does not depend on the accretion of a natural bed, and design issues of flow control and energy dissipation are unique in design of fishways. The design of fishways is not included in this guideline, though there is a brief overview of the subject in Chapter 10, *Fishways*.

Much of this guideline is focused on the passage of salmonid fishes. However, there are tremendous ecological benefits to providing connectivity between upstream and downstream reaches for other biota and physical processes. In addition to salmon and steelhead, there are at least 15 species of migrating fish in Washington State for which there is little or no information regarding migration timing, migration motivation or swimming ability. Ecological health of both upstream and downstream reaches depends on connectivity of physical processes such as sediment and debris transport, channel patterns and cycles, and patterns of disturbance and recovery, as well as biological connectivity. Stationary culverts at a fixed elevation may not be able to communicate these processes and may, therefore, affect overall ecosystem health.

Using the Hydraulic Design Option will not likely provide for many of these values. They will more likely be achieved by using the Stream-Simulation Design Option or by using options other than culverts, such as full-spanning bridges and road abandonment or relocation.

Figure 5-1. Hydraulic Option

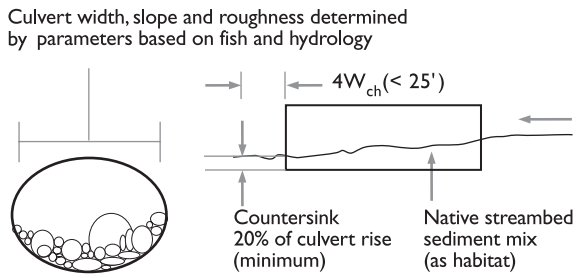

Hydraulic Design Option for fish passage through culverts.

Species and Size of Fish Determine Velocity Criteria

The actual allowable velocity and depth of flow for adult fish depend upon the target species and length of culvert as prescribed in WAC 220-110-070. Analysis for both velocity and depth should be performed using a factor of safety. These criteria (see **Table 5-1**) are intended to provide passage conditions for the weakest and smallest individuals of each species.

As mentioned earlier, the passage requirements for juvenile salmonids are assumed to be met if the design meets the needs of adult trout. If the design does not target adult trout, then the Hydraulic Design Option will not likely provide passage for juvenile salmonids. Even installation of artificial roughness features is not effective in controlling flow velocities for juvenile fish passage because of the turbulence they generate. The combination of low velocity and low turbulence required for passage of juvenile fish makes it impractical to address in design.

***Table 5-1**. Fish-passage design criteria for culvert installations.*

	Adult Trout >6 in. (150 mm)	**Adult Pink or Chum Salmon**	**Adult Chinook, Coho, Sockeye or Steelhead**
Culvert Length	**Maximum velocity (fps)**		
10 - 60 feet	4.0	5.0	6.0
60 - 100 feet	4.0	4.0	5.0
100 - 200 feet	3.0	3.0	4.0
Greater than 200 feet	2.0	2.0	3.0
	Minimum water depth (ft)		
	0.8	0.8	1.0
	Maximum hydraulic drop in fishway (ft)		
	0.8	0.8	1.0

Based on evaluation of juvenile passage through culverts conducted by P. D. Powers,[2] the recommended design velocities for fry and fingerlings are 1.1 and 1.3 fps respectively. Fry are spring-migrating juveniles generally less than 60 mm in fork length. Fingerlings are fall-migrating fish, generally greater than 60 mm in fork length. Powers noted that allowable velocities for these fish depend upon the type of corrugation of the pipe. These velocities are average cross-section velocities and would apply to any length of culvert. He observed that the fish swimming in waters flowing at these velocities could continue at that rate for an extended period time. These velocities might be achieved at some low-gradient sites with large culverts or at spring-fed streams with low peak flows.

Increasing the roughness with features like baffles can create a low enough average velocity to satisfy the needs of juvenile fish, but the turbulence created to do that becomes a barrier for them at moderate slopes. If juvenile passage is desired, it is recommended that a natural channel be built within the culvert. The complexity and diversity of natural channels are better suited to providing passage opportunities for small fish. The natural channel design is the recommended option in this case; it is described in the Chapter 6, *Stream-Simulation Design Option*.

The Hydraulic Design Option uses the average velocity in the cross section of the flow (without bed material) and assumes normal, open, channel flow throughout the culvert. This is a conservative design because it does not account for streambed material or backwater conditions that will increase the depth and, thus, somewhat reduce the velocity. This can be treated as a factor of safety for design. In reality, flow is seldom at normal depth throughout a culvert, particularly in a culvert that is on a relatively flat slope. Backwater-profile programs can be used to further refine the design. Keep in mind, however, that errors from hydrologic calculations may far outweigh differences between velocity calculation models. This design method also does not account for the boundary-layer velocities that fish will use in moving through a culvert. Boundary-layer velocities cannot be used because they are difficult to predict; turbulence can become a barrier, and continuity of a boundary layer through a culvert is difficult to create.

Migration Timing

The Hydraulic Design Option criteria must be satisfied 90 percent of the time during the migration season for the target species and age class. Since migration timings vary among species and watersheds, knowledge of the specific migration timings is necessary for development of hydrology. Different species or age classes at a site may migrate at different times of the year; multiple hydrologic analyses may be needed to determine the controlling hydraulic requirements. Generally, adult salmon and steelhead migrations occur during the fall and winter months. Juvenile salmon migrations occur in the spring as fry and in the fall as fingerlings.

Hydrology

Again, the hydraulic-design criteria must be satisfied 90 percent of the time during the passage season for the target species. The 10-percent exceedance flow for each target species is then considered the high fish-passage design flow. Passage criteria must be met for all flows from zero to the fish-passage design flow. There may be more than one fish-passage design flow if different life stages or species require passage at different times of the year. Until the hydrology is analyzed and the culvert hydraulics are designed to accommodate these life stages, it is not known which fish-passage design flow will control the design.

High Fish-Passage Design Flow

In designing culverts for fish passage, the high-flow hydrology of the stream must be understood to make sure fish can get through the culvert during high flows. This requires a hydrologic analysis to determine the high fish-passage design flow. The mean daily flow is the parameter used for fish-passage design-flow analysis. There are four types of hydraulic analysis that are acceptable for determining a range of fish-passage designs that correctly address flow. The scale and importance of the project and availability of data will dictate which level is applied to a specific project. They are, in order of preference:

1. stream gauging,
2. continuous-flow simulation model,
3. local-regression model, and
4. regional-regression model.

Another option is to use data obtained from one of the above methods to calibrate a basin-to-basin correlation between recorded flows in a nearby system and spot flows measured in the stream system where design flows need to be determined. Extreme care should be used when creating this correlation; the probability of induced errors increases.

Interpretation of historic stream-gauging data for a specific stream is the most preferred type of analysis, but adequate data for specific sites are rare. With a few flow data points, however, a regional flow model can easily be verified and calibrated. Calibration data should be within 25 percent of the fish-passage design flow to be valid. Continuous-flow simulation models are acceptable, though they are not normally justified solely for a fish-passage design. Single-event models are generally not acceptable since the fish-passage design flow is based on a flow-recurrence frequency rather than a peak flow.

For western Washington an acceptable, regional-regression model is the Powers-Saunders model,[3] which is included in Appendix C, *Design Flows for Ungauged Streams*. It is based specifically on the hydrology of western Washington streams and, therefore, cannot be used in other regions, nor for sites that do not fit within the range of watershed sizes and climate parameters used in the regression analysis.

The Powers-Saunders model was built by a multiple-regression analysis on stream flow data from 188 streams having drainage basins from less than one to about 50 square miles and with minimum gauging records of five years. Regression models for predicting fish-passage design flow (10-percent exceedance flow) were developed for three hydrologic provinces in western Washington for winter and spring months. Two regions have models for highland streams (gauge elevation above 1,000 feet) and lowland sites.

The models are in the form of the equation below.

$$Q_{HP} = aA^bP^cI^d$$

Equation 1

Where:

Q_{HP}	=	high fish-passage design flow in ft^3/sec
A	=	basin area in square miles
P	=	mean annual precipitation at the gauging station in inches
I	=	rainfall intensity: two-year, 24-hour precipitation
a	=	regression constant
b,c,d	=	regression exponents for basin area, precipitation and rainfall intensity. Mean annual precipitation and rainfall intensity were not statistically significant in all cases, so exponents for some regions are zero.

The standard statistical errors for the regression formulae vary from about 26 percent to 75 percent. Sound judgement must be used in applying standard error to the predicted fish-passage design flow for a specific site. For eastern Washington E. R. Rowland[4] developed a model that defines a fish-passage design flow per unit drainage area. Geographical Information Systems were used to evaluate spatial data corresponding to the sixth field Hydrologic Unit Code (HUC6), with the key parameters of mean annual precipitation, mean water stress index and mean elevation. The standard error ranged from 17 percent to 44 percent for six different regions. To use the model, the designer must complete five simple steps:

1. Delineate the watershed for the desired location.
2. Find the area of the watershed within each predefined HUC6 using the regional maps (termed contributing area).
3. Read the fish-passage design flow in cfs/ sq mi corresponding to each HUC6.
4. Multiply the contributing area with the corresponding fish passage design flow in cfs/sq mi for each contributing area.
5. Sum all the values to obtain the fish-passage design flow.

These approaches produce conservative estimates in most cases. However, consideration should also be given to the specific hydrology of the basin, target species for fish passage and future watershed conditions. It is recommended that, as a default, at least one standard deviation be added to the estimated flows derived from the estimated mean that was found using these formulas, unless a lower value can be justified by current and future watershed conditions. Lower values are justified for streams that have a slow response to rainfall events, such as spring-fed streams and basins with a lot of storage available. Higher estimates for Q_{HP} should be applied to steeper and urbanized or urbanizing watersheds, where land use and basin hydrology may change during the life of the project, thereby affecting the maximum and minimum flows.

Whatever model is used, future watershed conditions should be considered when choosing the fish-passage design flow. Continuous-flow simulation models and calibrated regional models most likely provide the best estimate of future conditions.

Structural design of the culvert will depend on an accurate analysis of flows higher than the high fish-passage design flow. This is discussed briefly in Chapter 8, *High-Flow Capacity*.

Low Fish-Passage Design Flow

The low design flow is calculated to determine the minimum water depth within the culvert. One way of determining low design flow is to use the two-year, seven-day, low flow as described in WAC 220-110-070. A simpler option is to use the zero-flow condition as described below.

Culverts designed using the Hydraulic Design Option for trout as the default will generally accumulate bed material, eventually forming a thalweg, at which point the depth requirement for the culvert is moot because the depth in the rest of the stream will also be too shallow for fish to travel (zero-flow condition). An exception to this is when a culvert becomes pressurized during an extreme flood event, the bed in the culvert scours out. If bed material doesn't immediately recruit to the culvert, the bare-bed condition may persist for some time, in which case a zero-flow condition becomes a barrier to fish passage. Culverts designed with natural beds inside them need to be monitored and maintained, especially following high-flow events.

Culverts in Tidal Areas

The hydrology of culverts in tidal areas is a special case. The hydraulic conditions in the culvert and downstream of the culvert change as the tide elevation changes. The fish-passage design flow must take into account any surface stream flow as well as any tidal outflow as the tide is ebbing. The total outflow is calculated by routing any stored tidal prism (tide water and stream-flow contributions) out through the culvert as the tide ebbs. The high fish-passage design flow (10-percent exceedance flow) should be calculated using one-hour increments of tidal change, assuming a tidal fluctuation between mean lower low water (MLLW) and mean higher high water (MHHW).

Considering the difficulty in achieving the standard fish-passage criteria, new culverts that create a barrier due to tidal extremes are not generally permitted, and removal is a preferred action for restoration. Where removal is not possible but there is a need to achieve the best possible fish-passage restoration, objectives that are different from the standard fish-passage criteria might be acceptable. Defining alternative objectives should be done in conjunction with a careful and thorough review of allowable upstream water levels and timing. Passage goals have been developed for specific projects to provide fish passage.

For example, retrofits have been constructed such that the fish-passage hydraulic criteria are exceeded no more than four continuous hours at any time during the fish-migration season. In such a case, passage is provided most hours of all days though may not be passable 90 percent of all hours. Temporary fish blockages would occur for several hours at the slack period of the highest tides.

If there is stream flow at times significant enough to create a barrier by its velocity, it should be assessed simultaneously with water-surface differentials created by tidal fluctuations and any other conditions (i.e. tide gate closure) that create a barrier. The simultaneous evaluation could be done using a Monte Carlo procedure, or other similar analysis.

Streams on tide flats are sometimes impassable due to shallow flow at low flow and low tide. If a tide flat immediately downstream of a culvert is impassable at low tide, the 10-percent exceedance criteria is applied only to the time during which fish can get to the culvert.

A tide chart can be also used to estimate the percentage of time a culvert is out of compliance. **Table 5-2** shows tidal elevations that are exceeded at selected frequencies at reference stations in Puget Sound and the Washington coast. In general, the frequency that any tidal elevation (relative to MHHW or MLLW) is exceeded is sufficiently uniform within the reference station regions of Washington State, when correction factors are applied. Tidal elevations for specific exceedance levels at secondary stations can be estimated by applying the appropriate tidal correction value for each individual station.
For example, the tide at Aberdeen is lower than 1.8 relative to MLLW 10 percent of the time. So a culvert that is passable at all tides above 1.8 is passable 90 percent of the time.

Table 5-2. *Tide-exceedance chart for selected reference stations in Washington State. Datum is local tidal datum (MLLW = 0.0). MLLW and MHHW are from National Oceanic and Atmospheric Administration (NOAA) data. Percent exceedance values are calculated from predicted tidal data from November 1, 1990 to January 31, 1991 for the reference stations.*

Reference Tidal Station	**Astoria**	**Aberdeen**	**Pt. Townsend**	**Seattle**
MLLW (NOAA)	0.0	0.0	0.0	0.0
MHHW (NOAA)	8.42	10.07	8.45	11.35
Percent Exceedance				
90%	0.9	1.8	0.3	0.8
80%	2.3	3.4	2.2	3.3
70%	3.3	4.5	3.9	5.3
60%	4.0	5.4	5.1	6.8
50%	4.8	6.5	6.0	7.7
40%	5.7	7.5	6.8	8.5
30%	6.5	8.3	7.5	9.4
20%	7.2	9.1	8.1	10.3
10%	8.3	10.2	8.7	11.4

Tidal Elevation Datum

Determining appropriate high and/or low mean tidal values for a specific site can be done with tidal prediction programs, or by accessing the information at many internet sites including NOAA's at www.co-ops.nos.noaa.gov. It is important to relate the datum used for topographical data at the project site with the tidal datum established for that area. This should be done by a person experienced with standard surveying methods. Benchmarks for tidal stations are typically referenced in feet or meters above established tidal elevations. Observed tidal elevations and predicted tidal elevations may vary. Local conditions and weather systems can affect the magnitude and timing of tidal elevations, but they are not predictable and are, therefore, difficult to design for. Information on benchmarks and observed and predicted tidal values can be found at the NOAA web site listed above.

Additionally, the U.S. Army Corps of Engineers offers a number of reference publications related to tides that can be used when designing in tidally influenced areas. Visit the Corps web site at www.usace.army.mil.

Velocity and Depth

To keep the average cross-section velocity inside the culvert at or below the velocity criteria, select the appropriate combination of culvert size, material (roughness) and slope. Several types of hydraulic analyses are acceptable for determining the right combination; they vary in their complexity, resulting factor of safety and cost for the final design. Stage-discharge relationships can be developed by simple calculations or complex water-surface profiles.

The most simple analysis is the calculation of depth and velocity, assuming uniform flow; that is, with no backwater influence. This is the depth and velocity generally derived from a calculation of Manning's roughness coefficient (see **Equation 2**) or from a chart of culvert-hydraulic characteristics.

Calculate the depth and velocity. The depth will be matched to the hydraulic profile of the downstream channel, as described later in the section addressing *Baffles*.

$$Q = \frac{1.49AS^{1/2}R_h^{2/3}}{n} = VA$$

Equation 2

Where:

Q	=	Channel Discharge in ft^3/sec
S	=	Channel Slope in ft/ft
R_h	=	Hydraulic Radius (cross-sectional area/wetted perimeter) in ft
A	=	Cross-sectional Area in ft^2
V	=	Average Channel Velocity in ft/sec
n	=	Mannings "*n*" (channel roughness coefficient)

Computer backwater programs such as HEC-RAS, HY8, CULVERT MASTER® and others can assist in the design process. The minimum amount of information needed for these programs varies with the program and complexity of the project. A backwater analysis allows the designer to optimize the design by using the lower velocities created by the backwatered condition. Without a backwater calculation, the culvert velocities are less accurate but more conservative. Estimation of culvert and channel roughness are described in Appendix F, *Summary Forms for Fish-Passage Design Data.*

A good rule of thumb for fish passage is to keep the flow subcritical for all flows up through the fish-passage design flow. This usually keeps the velocity low enough to satisfy the criteria, and it eliminates turbulence that would have been caused by a hydraulic jump inside the culvert.

Baffles

Baffles are a series of features that, when added to a culvert, increase the hydraulic roughness of the culvert. Unlike hydraulic-control structures that work separately, such as weirs, baffles work together to reduce the average cross-section velocity inside the culvert. Flow passing over a series of baffles during high-water conditions creates a streaming pattern rather than, in the case of weirs, a plunging pattern. To create streaming flow, the baffles have to be relatively close together and short in length compared to the flow depth. Where baffles are applied, detailed stream gauging needs to be used to assess stream hydrology. The quantitative design of baffle hydraulics includes size and spacing, as described in Appendix D, *Hydraulics of Baffles.*

At low flows, typical baffles do act as weirs, but they transition to roughness elements as the flow deepens. Baffles have often been designed inappropriately to function as weirs. Weirs are discrete, hydraulic elements that cause the flow energy to dissipate in the pools between them; this concept is very different from constructing a series of baffles that act together to create roughness. When baffles are designed to function as weirs, the fishway pool volume criteria must be complied with (see Chapter 10).

Baffles installed inside a culvert should only be considered temporary retrofits to dissipate flow energy until a permanent solution can be found. They are not appropriate for new culvert installations, permanent retrofits or replacements. Many culverts currently undergoing retrofit to accommodate fish passage were designed only for hydraulic capacity. Adding baffles reduces hydraulic capacity, which often becomes a limit to flood capacity. The tendency for baffles to catch woody debris exacerbates the culvert-capacity problem, potentially creates a fish barrier and may eventually plug the culvert, leading to a road-fill failure. Because of the requirement for maintenance access, baffles should not be installed in culverts with less than five feet of headroom.

The need for frequent inspection and maintenance of baffled culverts is widely acknowledged, but few maintenance programs establish the protocol or budget for adequate maintenance. Safe passage through culverts is most critical for many salmonid species during freshets in the winter months. This is the also the time of greatest risk of floods and the most voluminous presence of debris. Maintenance is usually impossible during high-flow fish-passage seasons; so, if culverts fail or plug, fish-passage capability is lost when it is most needed. Baffles increase the likelihood of culvert plugging or failure. And, since the baffles and the potential barriers are deep inside the culvert where they can't be seen easily, they are often not inspected at all. The added roughness brought on by the baffles raises the hydraulic profile through the culvert, making it more difficult to match to the profile of the downstream channel. What's more, baffles may block juvenile fish passage by creating large-scale turbulence relative to the size of the fish.[2] Baffles, therefore, are certainly not recommended for culverts when juvenile fish passage is required. With appropriate hydraulic design and site conditions, however, juvenile fish passage might be provided by weirs that become baffles at higher discharges.

Though the hydraulics of baffles have been studied, there has been no thorough evaluation of adult or juvenile fish passage through baffled culverts at design flows.

Baffle Styles
Baffles might be used in temporary retrofit situations where removal of a culvert is not immediately feasible. In those situations where baffles are unavoidable, three basic styles of baffle are suggested; two for round culverts and one for box culverts as shown in **Figure 5-2.** They are each designed with a continuous alignment of notches along one wall rather than alternating from one wall to the other. This allows less resistance to high flows and an uninterrupted line of fish passage along one or both sides. This is particularly important for weak fish, which would be forced to cross the high-velocity zone at every baffle in an alternating-baffle design. The detail of angled baffles is shown for box culverts; the continuously sloped baffle is generally used for juvenile fish passage and in culverts six feet wide and less.

Figure 5-2. Common Baffle Styles

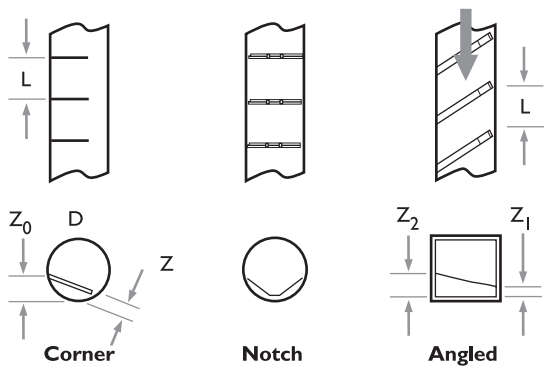

Recommended styles of baffles for round and box culverts.

Baffled culverts are generally limited to slopes equal to or less than 3.5 percent. This is based on direct observation of existing baffle systems; improved baffle systems may change this limit. Steeper slopes require either a stream-simulation or a fishway-weir design. Some basic concepts of fishway design are discussed briefly in Chapter 10.

The notch baffle improves the hydraulic performance of large culverts. The central segment of the this type of baffle can be up to several feet high or it can be eliminated entirely, in which case there are two independent corner baffles. Corner baffles might be used in culverts with slopes in the range of 1.0 to 2.5 percent. They are intended to provide wall roughness with a minimum potential for blockage by debris. Notch baffles can be applied to culverts with slopes of 2.5 to 3.5 percent. They have been installed successfully at greater slopes, but they are designed to serve as fishway weirs at slopes over 3.5 percent.

Baffles installed in the area of the culvert inlet contraction may significantly reduce the culvert capacity when it is in inlet-control condition. The upstream baffle should be placed the distance of at least one culvert-diameter downstream of the inlet and should be high enough to ensure subcritical flow at the inlet at the high design flow. A modification to the culvert, such as a mitered end or wing walls, may also be required to improve its hydraulic efficiency.

Roughened Channel

Roughened channels consist of a graded mix of rock and sediment built into a culvert to create enough roughness and hydraulic diversity to achieve fish passage. Increased roughness creates diversity in flow velocities and patterns, which, in turn, provides migration paths and resting areas for a variety of fish sizes.

This design principle can be used for the creation of channels outside of culverts too, though it should be done very cautiously. If roughness areas are located downstream of a fixed structure, such as a culvert, any degradation to the channel will result in the culvert countersink or velocity criteria to be exceeded. A roughened channel is acceptable upstream of culverts to control channel headcutting, as described in Chapter 7, *Channel Profile*. The Stream-Simulation Design Option gives a much more conservative design for fish passage than roughened channels do and should be investigated before opting for roughened channels.

Installations of this technique inside of culverts have had mixed results with regard to fish passage and stability. Because of this, **culverts designed as roughened channels are viewed as experimental at this time**. An experimental technology plan should be included for culvert designs using this process that consists of:

1. a study plan that includes specific, experimental objectives to further the development or acceptance of the concept;

2. a contingency plan, including a commitment to upgrade the facility if it fails in function or structure;

3. a monitoring plan, including reporting and peer critique of findings; and

4. closure, when the facility would either be accepted as adequate by the Washington Department of Fish and Wildlife or be considered an unresolved fish-passage barrier.

A history of monitoring experimental installations will be required before the technique is accepted as a standard method and specific design details are provided. In the meantime, details of current design principles are provided in Appendix E, *Design of Roughened Channels*. Changes in these recommendations may occur as new observations and data becomes available.

Large-scale roughness can be used in channels to control velocity within the culvert. Ideally, channels are roughened to the point where the potential energy available at the upstream end is dissipated in turbulence through the pipe, and no excess kinetic energy of flow is present at the downstream end. It should be recognized that culverts designed as roughened channels will have greater flow per unit width than the adjacent upstream channel and, therefore, higher bed stress, turbulence and velocity. As a result, roughened-channel culverts have higher sediment-transport rates than the natural stream and tend to become scoured and nonalluvial. This situation is less likely where roughened channels are built without the confinement of culvert walls.

The most important aspects to consider in the design of roughened channels are:

- average velocity at flows up to the fish-passage design flow,
- bed stability during the 100-year recurrence interval flow event,
- turbulence, and
- bed porosity.

Maximum average velocity is a basic criteria of the Hydraulic Design Option. The bed materials inside the culvert create the fish-passage structure. Their stability is fundamental to the permanence of that structure. The effect of turbulence on fish passage can be approximated by limiting the energy dissipation factor (see Appendix D). In order for low flows to remain on the surface of the culvert bed and not percolate through a course, permeable substrate, bed porosity must be minimized. A section is devoted to each of these considerations in Appendix E.

Channel Backwater

The downstream invert elevation of the culvert is set by matching the water-surface profile at the culvert outlet to the backwater elevation of the downstream channel. The downstream water-surface profile can be determined by either observations of the water surface at flow events near the fish-passage design flow, or by calculation of the water-surface profile in a uniform flow condition. Several iterations of calculations and designs may be required to establish the culvert slope and roughness and to match the profile to the downstream channel backwater.

The downstream backwater may also be created by raising and steepening the channel to an appropriate elevation. Structures for that purpose are described in Chapter 7.

Water-Surface Observations

Direct observations of water-surface elevations, tied to recorded stream flows, provide the most reliable determination of backwater elevation. A flow within at least 25 percent of the high fish-passage design flow should be included in a set of at least three observations to produce a reliable, stage-discharge curve. The stage discharge curve can then be extrapolated to get the water-surface elevations for any fish-passage design flow. If the stage-discharge curve is extrapolated, verify that the backwater elevation for the fish-passage design flow is not actually controlled by the bankfull capacity of the channel. Water-surface observations only apply to new installations or where the downstream channel elevation and water-surface profile will not be affected by the project. Otherwise, a calculated backwater elevation is required.

Calculated Backwater

A second option is to calculate the water surface downstream of the culvert using an open-channel flow calculation such as Manning's roughness coefficient. It should be calibrated with at least one high-flow water-surface observation. It is less preferable to use an estimated Manning's Equation for the open-channel flow calculation. Selection of an appropriate value for Manning's *n* is very significant to the accuracy of the computed water-surface profiles. The value is highly variable and depends upon a number of factors, including surface roughness, vegetation, channel irregularities, channel alignment, scour and deposition, obstructions, size and shape of the channel, stage and discharge, suspended material, and bedload. These variables are combined into a single, composite, roughness coefficient using methods such as those described in *Open-Channel Hydraulics* by V. T. Chow.[5] Evaluate the accuracy of the model that was used, and apply a safety factor to the calculated backwater value if needed.

In situations where the project will affect the downstream channel, either directly as part of the design or indirectly as the channel evolves to fit the project, use the new channel slope, roughness and cross section for the backwater calculation. The stage calibration should be in a reach similar to the eventual cross section at the culvert outlet; use an unaffected reach upstream or downstream of the culvert but away from its influence.

Chapter 6 – Stream-Simulation Design Option

Description and Application

Stream simulation is a design method used to create or maintain natural stream processes in a culvert. Stream simulation is based on the principle that, if fish can migrate through the natural channel, they can also migrate through a man-made channel that simulates the stream channel. Taking this approach eliminates the need to consider such parameters as target species, timing of migration, and fish-passage hydrology because it simply mimics what already exists. The criteria required in the Hydraulic Design Option (velocity and depth) do not have to be calculated. What's more, passage for species that are present in the stream, but for which no criteria have yet been developed, is significantly improved, if not assured. Within limits, sediment transport, fish passage, and flood and debris conveyance are designed to function just as they would in the natural channel adjacent to the culvert.

Generally, the Stream-Simulation Design Option is best applied in the following situations:

- new and replacement-culvert installations;
- complex installations that involve moderate-to-high, natural-channel gradient and culvert length;
- narrow stream valleys;
- culvert bed slopes that will be no more than 125 percent of the upstream channel slope (this method is not meant to limit work to within the right-of-way);
- locations where passage is required for all fish species;
- locations where ecological connectivity is required at a site; and
- locations where engineering design expertise, hydrology and survey information is available.

Culverts designed to simulate streambeds are sized wider than the channel width, and the bed inside the culvert is sloped at a similar or greater gradient than the adjacent stream reach (within limits, as outlined below). These culverts are filled with a sediment mix that emulates the natural channel, erodes and deforms similar to the natural channel, and is unlikely to change grade unless specifically designed to do so. This fill material is placed in the culvert to mimic a stream channel and is allowed to adjust in minor ways to changing conditions. The most basic stream-simulation culvert is a bottomless culvert placed over a natural streambed. Here, the natural streambed remains in place. Stream-simulation culverts are usually the preferred alternative for steep channels and long crossings.

The concepts behind the Stream-Simulation Design Option can be applied to the design of short reaches of channel outside of culverts as well, particularly in higher-gradient streams. Design guidance is all but absent from the general literature for how to go about designing steep channels, so the Stream-Simulation Design Option, provides a simple, effective approach.

The width criteria for culverts (outlined below) need not restrict the size of constructed channels. Width should be calculated based on a representative section of the natural stream. Guidance for designing the slope, structure and bed composition of a constructed channel is discussed in the following section; however, it should be noted that constructed channels longer than about 10 channel widths should be designed using a much more rigorous and comprehensive procedure than that described here.

Design Process

A preliminary design process has been developed for stream simulation culverts and it represents the state of our knowledge at this point. Since so few of these culverts have been designed in an intentional way, this process will need to be revised as experience with them broadens. Due to our lack of experience with this technique, some risk is involved and this guidance should be applied conservatively.

Suitability of the Site

The primary factor that determines the suitability of a site for stream-simulation culverts is the natural reach gradient. Limitations of design slope and width are due to a lack of experience at this time. With more experience, we expect that higher gradients, and possibly wider channels, will become common. Reach slopes of six percent and less are well within the limits of this design process. Stream-simulation culverts designed for slopes greater than six percent must be accompanied by an experimental design document so that the functioning of the culvert can be observed and documented over time.

First, the slope ratio must be determined. Slope ratio is a measure of the difference between the culvert bed slope, S_{culv} and the natural channel slope, S_{ch}

$$\text{Slope Ratio} = \frac{S_{culv}}{S_{ch}}$$

Equation 3

For a culvert to be designed using the stream-simulation approach, the slope ratio must be less than or equal to 1.25. Slope ratios greater than 1.25 require the application of the Hydraulic Design Option, including the roughened-channel option. For new culverts, the channel slope to be used in the equation is the slope that would occur in the absence of the culvert. For replacing an existing culvert, the upstream channel slope is generally used in this equation, since it is the upstream reach that supplies the bedload to the culvert. The channel downstream of an existing culvert is often incised or otherwise modified by the presence of the culvert and will not likely reflect natural conditions. Even so, either the upstream or downstream channel can be used; whichever best reflects the natural slope at the culvert site. Undersized culverts can significantly influence the channel slope immediately upstream; therefore, a long profile is necessary to discern the true gradient (see Appendix F, *Summary Forms for Fish Fish-Passage Design Data* for more details). Stream Simulation cannot be used to connect significantly dissimilar upstream and downstream reaches in order to keep the project within the road right-of-way. This is an inappropriate application of the design method.

It may be advisable to restrict the slope ratio to values less than 1.25 if, through hydraulic analysis, it is found that the flow regime changes inside or at the outlet of the culvert. Such changes, from subcritical to supercritical flow or the reverse, result in a large release in energy and subsequent scour. Turbulent, subcritical flow usually occurs in natural channels; although, during large floods, this may not be the case. If a hydraulic jump is anticipated, then channel geometry should be altered (such as reducing the culvert slope) to avoid it.

The culvert itself may be installed flat or at a grade, depending upon the culvert length and bed slope. Longer pipes will require some slope in order to maintain waterway area at the inlet. Culvert slope should be minimized to decrease shear stress between the culvert bottom and the bed material.

In general, channels suitable for stream-simulation culverts must be in equilibrium, meaning that the quantity and size of sediment transported into the reach is roughly equivalent to the quantity and size of sediment transported out of the reach. The channel must be stable within a range that can be accommodated by the culvert. It is important to assess the channel's susceptibility to vertical changes. If the channel downstream is likely to degrade, then the stream-simulation culvert, or any other kind of culvert for that matter, must be protected by setting it at a suitable countersunk elevation, or there must be one or more bed controls installed downstream that anticipate the degradation. Conversely, if the reach is susceptible to aggradation, then the culvert size must be increased to allow additional material to accrete and ultimately pass through the culvert without any adverse impacts.

Assessment of the Adjacent Stream Reach

An assessment of the channel will provide information needed for the design of the culvert bed width and the bed design within the culvert. The upstream reach adjacent to the culvert site is typically used for the assessment, with the considerations mentioned previously regarding the slope ratio.

In the case of a new culvert installation, there is no need for a reach assessment if the natural channel is to function as the stream-simulation channel. The natural channel would then remain in place, unaffected by the culvert that is installed over it.

Streams can be subdivided into two general categories for the purposes of stream-simulation design. Both are appropriate for stream simulation, but they have different characteristics. The first category contains low-gradient, alluvial channels. These are generally pool-riffle streams having a slope of less than four percent (classified by D. L. Rosgen[6] as types C, E or F). Stream simulation in these cases implies a mobile bed and may require wider culvert widths than indicated by the criteria below. Bed particles are of a size that moves easily during frequent-interval storms. Scenario 1 culverts (described later in this chapter) are suitable for this category of stream.

The use of a four-percent slope as a threshold is somewhat arbitrary. Current experience has been that streams and their stream-simulation culverts having slopes of four percent or less tend to have mobile beds at frequent intervals. It is conceivable that a flatter-sloped channel can have a very stable bed, in which case the culvert design should reflect that.

Streams in the second category have a higher-gradient, step-pool or cascade-type channel, with a slope of greater than four percent and with conditions matching Rosgen's stream classifications of A, B, F or G.[6] The beds of these channels are very stable and adjust only during rare storm events. These are Scenario 2 culverts.

For the most part, beds within new culverts should be installed at the natural channel gradient. Beds within replacement culverts, in situations where the downstream channel has degraded, can be installed at a steeper gradient than the adjacent channel, generally up to a slope ratio of 1.25 with careful consideration of the risks and limitations of stream-simulation designs. Where the stream-simulation culvert is to be placed at the same gradient as the channel, the bed composition and pattern of the adjacent channel (outside the influence of structures) will suggest what the bed in the culvert should look like. The exception is where channels are dominated by large pieces of wood. Stream-simulation culverts using wood as roughness or to form steps are not recommended at this time. For reaches that are dominated by wood, an alternative paradigm should be found. While stream-simulation culverts are probably the best culvert alternative for streams with high debris potential, there is still the risk that wood will form a jam inside the pipe and back up flow. Bridges are much better than culverts for allowing the movement of debris where there is a high potential for large-wood movement or debris flows. See Chapter 7, *Channel Profile* and Appendix F for more information on channel profiles.

Culvert Type and Size

The exact type of culvert used for stream simulation is largely a matter of preference. All types of corrugated metal pipes and concrete boxes have been used. Bottomless structures have been very successful because they allow the native bed to remain in place and fully functioning. Bottomless structures have the added advantages of allowing new channels to be built upstream before the culverts are set in place; and, in steep channels, footings can easily be protected from scour because the bed is designed to remain fixed in place.

Single-piece round corrugated metal pipes are sometimes preferred to pipe arches for several reasons. A round pipe of a diameter similar to a given pipe-arch span will have greater depth of fill for the same bed and crown elevations, allowing more vertical bed change before the pipe bottom is exposed. These two types of pipes will cost roughly the same. Assembly and installation of the round pipe is easier than the corresponding pipe arch.

Structural plate metal culverts, round or arched, can be placed on the bedding and partially backfilled with a few of the top plates left off. The fill material can then be loaded in from the top and distributed inside with small machinery or by hand. Some contractors have reported difficulties using this technique, however. Difficulties have included non-uniform compaction and distortion of culvert plates causing problems in joining the final panels.

The minimum width of the bed in any type of culvert ($W_{culvert\ bed}$, in feet) should be determined by

$$W_{culvert\ bed} = 1.2W_{ch} + 2 \text{ (in feet)}$$

Equation 4

Where: W_{ch} = the width of the bankfull channel.

This channel bed width is further described in Appendix A, *Glossary* as well as Appendix H, *Channel-Width Measurement.* The result, $W_{culvert\ bed}$, is rounded up to the next whole foot. It must be emphasized that $W_{culvert\ bed}$ is the width of the bed *inside* the culvert, not the culvert diameter. The diameter of a round culvert is 10 percent greater than the width of the bed occupying the bottom 30 percent of the culvert. There are a number of reasons for the relationship in Equation 4, and there are some exceptions. It is generally accepted that natural channels need width over and above their active channel to function normally. The degree to which the culvert sides must extend beyond this width is a matter of debate. If the designer can demonstrate that a culvert needs to be wider or narrower than provided by the above equation, then that width may be acceptable.

To be completely general, Equation 4 should be tied to channel type and entrenchment ratio. At this time the equation has proven to reliably prescribe a suitable culvert bed width for the range of channel types it has been applied to, primarily small, steep streams.

Before deviating from Equation 4, several concerns will need to be addressed. For instance, contraction at the inlet is a potentially serious source of bed scour. This scour will occur at greater-than-bankfull flows and could alter the characteristics of the stream-simulation bed and adjacent channel. These effects must be assessed before recommending the use of a pipe that is smaller than what Equation 4 suggests. A worst-case scenario would involve a low-gradient, unconfined, alluvial channel upstream of the culvert. The active channel width may contain only a fraction of the total flow during a 10-year storm. Inlet contraction in this case would be severe, and it may be advisable to size the culvert wider than the width given by Equation 4. Inlet modifications, such as wing walls, may reduce contraction-induced turbulence, but velocities can still remain high enough to scour the bed. In severe cases, a bridge is recommended.

In a confined valley channel where the stream width does not change substantially with stage, the culvert may not need to be any wider than the channel as long as it is sized to pass flood flows safely. There is a lower limit to this, however. That limitation is where the culvert is just too small to construct a channel in. Depending upon length, a diameter, or span, of six feet is a minimum for shorter culverts. As a word of caution, incised channels may look narrow early in their development but will widen with age.[7] Stream-simulation culverts should be sized to anticipate this future widening.

By adding the constant of two feet to the equation, very small culverts that would result from applying a simple factor to stream-bed width on small streams can be avoided. These small culverts could not achieve stream simulation because they are unlikely to provide connectivity between upstream and downstream reaches (passing debris, sediment and storm flows) without plugging or pressurizing the pipe.

The Washington Department of Fish and Wildlife has conducted preliminary research (unpublished) that has shown that a culvert bed width must be at least 30 percent larger than the width of the bankfull channel in order to maintain hydraulic forces similar to those of the natural channel during the 10-year storm. Based on Equation 4, typical culvert sizing ranges from 30 to 60 percent wider than the width of the channel. The intention of stream simulation is to extend this similarity beyond the 10-year storm, hence the increase in sizing.

A motivating factor for developing stream-simulation culverts is to facilitate juvenile fish passage. These fish use stream margins and a variety of migration pathways where low levels of velocity and turbulence occur. Equation 4 allows for some of the channel width to be reserved for margins. In effect, the stream-simulation culvert has "banks" inside for the majority of flows that facilitate juvenile fish passage for all but peak events.

Some vertical and plan-form variation can take place in a stream-simulation culvert that is wider than the channel width. There will be some meander and/or step-pool formation inside. In the existing stream-simulation installations, low-flow channels meander within the length of the pipe, and step pools provide energy dissipation at high flow.

Wildlife passage under roads can be provided with large stream-simulation culverts. Birds are known to fly through them. Amphibians and small animals likely can pass on the banks inside. In one stream-simulation culvert, grass grows on the margin a short distance into the pipe, indicating the stability of the stream margin. Coho have spawned in this style of culvert.

In order to ensure that animals entering on any given side of the culvert have a continuous passageway, the center of the channel must remain roughly in the middle of the culvert span. This can be accomplished by following the recommendations given in Scenarios 1 and 2 (next section). If the thalweg is allowed to hug the culvert wall at some point along its length, the pathway may be cut off.

Culvert Bed Configuration

Two stream-simulation scenarios are depicted schematically in **Figures 6-1** and **6-2**. The scenarios characterize the upstream channel and are based on information gathered from the upstream reach assessment. Each scenario leads to a different approach for designing the streambed.
If the channel is in equilibrium (neither aggrading or degrading) and the slope is maintained by sediment, the composition of the channel should be described by a sample of the bed material or by a surface pebble count. If wood or roots dominate the slope, bed material must be specified using a reference-reach method or a sediment-stability model. A reference reach is another channel with similar slope and width used as an example or design template. The bed-sediment gradation is to be designed using natural streambed gradation. Details of these methods are described In **Figures 6-1** and **6-2**.

Figure 6-1. Low Slope Stream Simulation

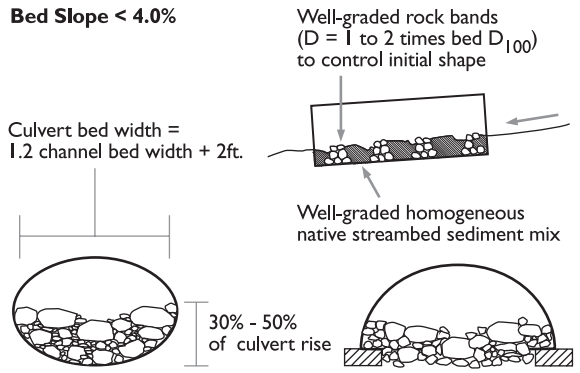

Stream-Simulation Design Option Scenario 1.

Figure 6-2. High Slope Stream Simulation

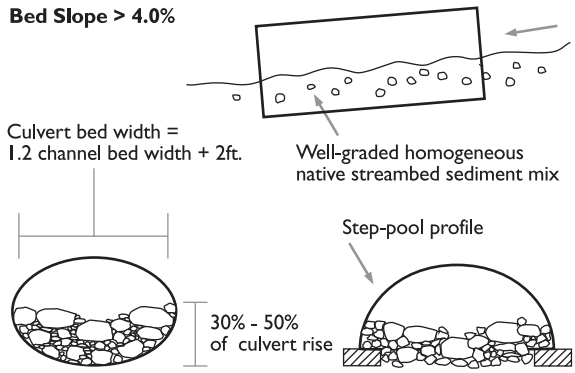

Stream-Simulation Design Option Scenario 2.

Scenario 1
The culvert bed gradient is less than four percent, and the bed is predominantly native material with bands of coarser rock to control grade and channel cross-section shape. In lower-gradient channels, bed forms are fluid, and it may be some time before channel structure is formed. There is also a tendency for the deepest part of the channel to follow a wall of the culvert because of the smoothness of the wall. The bands of rock help form structure and maintain gradient, and they provide a small, low-flow meander of the thalweg laterally. The crest of these bands is lower in the middle, encouraging the channel to stay in the central part of the culvert. In wider, low-gradient culverts, the low-flow channel should meander. The bands are composed of well-graded rock that is one to two times D_{100} (the largest particle found in the bed).

In smaller streams (width of channel less than about eight feet), D_{100} is adequate. Wider streams will require larger rock. Spacing of the bands depends upon slope and channel width. The distance between rock bands is the lesser of five times the width of the channel or as necessary to provide a vertical difference between crests less than or equal to 0.8 feet. Spacing starts at the naturally occurring or intentionally placed downstream grade control. These bands should never be closer than two channel widths or 25 feet (whichever is less) from the inlet or outlet of the culvert. Partially spanning rock clusters or similar structures may be substituted for the rock bands. Care must be taken that these do not create undue scour at high flow and force bed material out of the culvert.

Scenario 2
The culvert bed gradient is greater than four percent. Native or engineered bed material is used throughout the fill. No bed-control structures are needed since beds at these gradients are very coarse and stable. The bed has a monolithic structure where the largest particles are in contact with each other, forming a network of continuous support along the whole length of the culvert and depth of the fill.

Culvert-Bed Design

The simplest case for using the Stream-Simulation Design Option for culverts is where the slope of the bed in the culvert is intended to match the slope of the adjacent reach. In this instance, there will be little, if any, discontinuity in sediment-transport characteristics. The bed load transported through the upstream reach will continuously supply the bed in the culvert with materials for form adjustments and rebuilding after large floods. If the culvert is sized appropriately, then the bed material placed inside the culvert will be the same as that found in the upstream bed.

The more challenging case is where the slope ratio approaches 1.25. Coarser bed material is not well-recruited; and, over time, the finer bed material is winnowed out. In this circumstance, special attention should be paid to the sizing and arrangement of materials in the culvert.

The selection and gradation of channel fill material must address bed stability at high flows and must be well-graded (includes all size classes) to prevent loss of significant surface flow. Where the bed is placed at the gradient of the adjacent channel, native size and gradation may be used as a guide to the fill mix. This is done with the understanding that conditions inside the culvert during peak flows may be more severe than those in the natural channel. The designer should begin with an accurate description of the upstream channel bed material, using a pebble count. In low-gradient streams, a pebble count will not detect or characterize an armor layer below the streambed surface. The gravel size of this armor layer may be an important component of the culvert fill in order to make it react in a way similar to the natural channel.

If, for some reason, the native streambed material is not appropriate for the culvert fill, then an engineered bed must be designed. There are several established approaches that analyze critical shear stress to evaluate bed stability in gravel bed streams. These approaches should be used in the design of stream-simulation culvert beds less having a gradient of less than one or two percent. It has been suggested that shear-stress analysis is unsuitable for slopes that exceed one percent and where relative roughness is high (where the 84th percentile particle is greater than 1/10 the water depth).[8,9] Clearly, conditions in high-gradient, stream-simulation culverts are outside the range for shear stress analysis. Several other approaches are available, four of which are outlined here:

None of these methods are fool-proof. They have had little practical application, but they do have a solid theoretical foundation and produce conclusions that are similar to each other. We recommend that the designer approach each stream and crossing as a new case and use all the design aids and sediment-stability methods available. This is a new science, and some failures should be expected.

Reference-Reach Approach

The reference-reach approach is preferred for sediment sizing in stream-simulation culverts. Maximum particle size and appropriate distribution can be determined by examining reaches directly upstream from the culvert or nearby reaches with similar characteristics (e.g., unit discharge, slope, geometry, relative stability) to the design channel. In situations where the hydraulic conditions and natural bedload movement inside the culvert need to be the same as those in the upstream reach, the native sediment gradation can be duplicated in the culvert fill without modification. Where the hydraulic conditions need to be more severe and transport capacity greater, the native sediments will have to be modified by a factor of safety to ensure that the bed can achieve stability. This factor of safety will be a function of the contraction ratio (the width of flow inside the culvert divided by the average width of flow in the channel upstream), the headwater-to-culvert-rise ratio and the slope ratio. There are no specific relationships yet defined between these ratios, nor is there a safety factor yet defined to be applied in sizing the bed material.

The culvert-entrance conditions must be analyzed, particularly when a floodplain is present upstream. An indication of conditions that warrant careful attention would be when the contraction ratio is less than one 1:1 at the bed-changing flow. When there is a significant contraction of flow at the culvert entrance or a high headwater-to-culvert-rise ratio, the culvert bed will experience greater scour and should, therefore, contain larger sediment sizes. Where this contraction is pronounced, the culvert width should be increased. Likewise, when the culvert bed is at a significantly greater slope than the upstream channel, the bed material must be heavy enough to resist flow acceleration, given the lack of bedload to replenish scoured materials.

As a guide, the largest particles in a natural step-pool channel are roughly similar in size to the depth of flow at its bankfull condition.[10,11]

Naturally occurring steep channel beds can be composed of material that is not placed or formed by normal stream processes. Comparatively large, glacial sediments or landslide debris may be exposed by erosion but not actually transported under the current hydrologic regime. These under-fit channels may indicate a much larger sediment size than is necessary to maintain gradient. Using such big boulders inside a culvert is conservative, but *too* big is also a problem. The largest particle should not exceed one quarter of the culvert bed width in order to avoid constrictions within the culvert. Constrictions may reduce migration-path opportunities and make the culvert more vulnerable to debris blockages.

Riprap-sizing techniques abound in the literature. Most assume normal flow conditions in larger, low-gradient rivers where shear stress is the predominant mechanism of failure and relative roughness is small. Most stream-simulation applications, where we are concerned with bed stability, are found at higher gradients. Appendix E, *Design of Roughened Channels* includes a review of some of the more relevant riprap-sizing equations.

Unit-Discharge Bed Design

J. C. Bathurst[12] studied the initial motion of sediment in high-gradient channels and developed an equation for the critical unit discharge for the movement of coarse particles. His equation has been rearranged to predict the size of a D_{84} particle that would be on the threshold of motion for a given critical unit discharge. This equation reflects conditions in coarse, high-gradient streams with heterogeneous beds.

$$D_{84} = 3.45S^{0.747}(1.25q_c)^{2/3}/g^{1/3}$$

Equation 5

Where:

D_{84}	=	intermediate axis of the 84th percentile particle in the sediment distribution, expressed in feet
S	=	energy slope of the proposed channel.
q_c	=	the critical unit discharge (total design discharge divided by the width of the bankfull channel) at which incipient motion of D_{84} occurs, in cubic feet per second per foot.
g	=	The acceleration due to gravity, feet/sec^2.

As a starting point for the development of sediment mixes for high-gradient, constructed stream channels, it is recommended that the above equation be used. There are two categories of design discharge based on slope. First, in channels with a slope greater than four percent or in underfit channels, the 100-year storm should be used as the design flow. When used in this way, this equation will closely predict the same size of particle as that found in natural channels with similar Q_{100} and W_{ch}. This is the goal of the Stream-Simulation Design Option.

Second, in streams having a gradient of less than four percent, the frequency of bed-changing flows varies widely. In underfit channels, the bed may not change for hundreds of years. In the case of recently incised channels, the bed may be restructured many times each year. If it is unclear how the bed should be designed, J. E. Costa's[13] paleohydraulic analysis can be used to determine the magnitude of the bed-changing flow for a given particle size. As shown in the next section, velocity, expressed in feet per second, is given by,

$$V = 9.57D^{0.487}$$

Equation 6

Where: D = expressed in feet, the median dimension of the average of the five largest particle sizes found in a natural channel reach whose slope is determined to be controlled by the bed materials.

Depth, read from Table 6-1, is also a function of D. From a cross section of the channel, the area in flow is found at depth. Flow area times velocity gives the discharge required to mobilize the bed.

The results of the Bathurst equation and Costa's paleohydraulic analysis generally agree; however, both should be checked. It is worth re-emphasizing that these are mobile or nearly mobile particles at these flows. If, for some reason, it is advisable to create a bed that is more stable, then particle sizes should be increased.

Bed Design by Paleohydraulic Analysis

Costa[13] developed a relationship between maximum particle size and flood depth. This work was done to determine the discharge of flash floods, but it has been useful in the design of stream channels. He used four different approaches to determine the incipient motion of the largest particles and, in combination with empirical relationships, averaged their results.

For determining depth, velocity (expressed in feet per second) is given by Equation 7,

$$V = 9.57(D_{84})^{0.487}$$

Equation 7

Where: D_{84} = is arrived at by an iterative procedure and expressed in feet.

D_{84} is first assumed, then velocity is calculated by Equation 7. Dividing the design flow by this velocity results in the cross-sectional area in flow. From the proposed channel cross section, the depth for this area is found, and **Table 6-1** shows the associated particle size, which is then compared to the assumed size, and so on. When the resulting particle size agrees with the initial estimate, the particle size is considered suitable for a design value of D_{84}.

It should be noted that the velocities from Equation 7 are relatively high, reflecting the severity of the flow associated with restructuring high-gradient streambeds. The Froude number is frequently greater than 1.0, as predicted by G. E. Grant, et al.,[10] which indicates confidence in this estimate.

Table 6-1. *Prediction of water depth for a given maximum particle size that has been moved. Data has been converted to English Units; some values are log-interpolated.*

Slope ▶	0.005	0.01	0.02	0.03	0.04	0.05	0.06	0.07	0.08	0.09	0.1
Particle Size**, ft** ▼	**Depth, ft**										
0.2	1.2	0.9	0.6	0.5	0.5	0.4	0.4	0.4	0.4	0.4	0.4
0.5	3.0	2.1	1.5	1.3	1.2	1.0	1.0	0.9	0.9	0.9	0.8
1.0	6.0	4.1	2.9	2.5	2.2	1.9	1.8	1.8	1.7	1.6	1.5
1.5	8.8	5.9	4.1	3.6	3.1	2.7	2.6	2.5	2.4	2.2	2.1
2.0	11.3	7.4	5.2	4.5	3.9	3.4	3.2	3.1	2.9	2.8	2.7
2.5	13.6	8.9	6.2	5.4	4.7	4.1	3.9	3.7	3.5	3.3	3.2
3.0	15.6	10.2	7.1	6.1	5.3	4.6	4.4	4.2	4.0	3.8	3.6
3.5	17.6	11.4	7.9	6.9	6.0	5.2	4.9	4.7	4.5	4.3	4.1
4.0	19.5	12.6	8.7	7.5	6.6	5.7	5.4	5.2	4.9	4.7	4.5
4.5	21.3	13.7	9.4	8.2	7.2	6.2	5.9	5.7	5.4	5.1	4.9
8.1	36.4	23.1	15.6	13.5	11.7	10.1	9.6	9.1	8.6	8.2	7.8
10.5	45.6	28.9	19.4	16.7	14.4	12.5	11.8	11.2	10.6	10.0	9.5

Keep in mind that Costa determined the size of the rock that had been moved by the flow at that depth and slope. At higher slopes, the Costa equation consistently indicates smaller particle sizes than the Bathurst equation, all other conditions being equal. At these slopes, there is a much wider range of variables, and their influence on the threshold of movement is indeterminate.

Bed-Material Gradation and Specification

Knowing the size of the largest material, D_{max}, or any other characteristic size, the rest of the bed mixture is to be well-graded to minimize permeability. In the case of a bottomless culvert, a well-graded bed may already be present. If the bed material must be imported, a suggested method is to use a synthetic streambed mix. Naturally sorted streambed sediments are almost always distributed in the "S" curve, as shown in **Figure 6-3**.

Figure 6-3. Natural Sediment Distributions

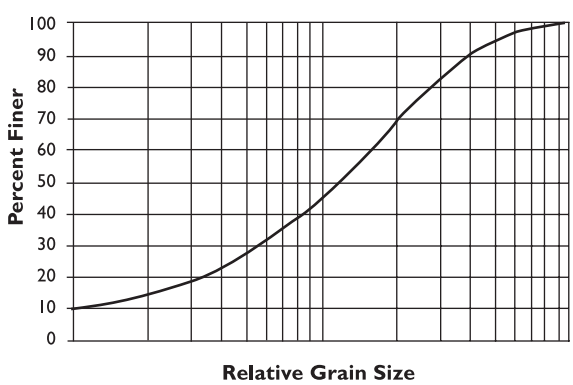

Figure 6-3 represents a smooth curve between some basic relationships found in natural distributions, summarized in the following relationships as a function of D_{84}:

$$D_{84}/D_{100} = 0.4$$

$$D_{84}/D_{50} = 2.5$$

$$D_{84}/D_{16} = 8.0$$

For comparison, a typical ratio for riprap gradations is

$$D_{84/}\ D_{16} < 2.0.$$

These ratios are averaged from a wide variety of streambeds in different environments.[14,15,16,17,18] Slopes ranged from about 0.3 to 22 percent. Natural distributions have a very wide range of sizes for various reasons. What is significant for the design of stream-simulation culverts is that the largest 15 to 20 percent plays a major role in the stability of higher gradient channels.[13,19] This fraction must be present, and the largest clast is significantly larger than the median size. The lower portion of the gradation fills the interstices and ensures a nonporous bed.

The gradation given by these ratios should be considered a starting point for the mixture. It can then be refined as the designer considers available materials. The result is the raw material for the streambed, so it should reflect the composition of a natural channel.

Situations arise where the application of one of the stability methods and the relative particle-size ratios given above lead to unrealistic sediment sizes. On streams less than about 20 feet wide, where stream simulation is applied, the largest particles rarely exceed four or five feet, as measured along the intermediate axis. If, by applying the suggested ratios, very large boulders are required, then adjustments may be required to create a practical prescription. For instance, if stability analysis indicates that D_{84} should be 1.8 feet, then, by the ratio above, D_{100} will be 4.5 feet. This is a very large boulder and not likely to be found in a tributary stream, except as a glacial remnant or a deposit of a landslide or debris flow. Clearly, if this channel is 14 feet wide with an 11-percent slope, then large material is required. But how large? In this case one should look at the adjacent channel for guidance. The presence of large, stable, moss-covered boulders should indicate that the size of that boulder is a reasonable dimension for D_{100}. Once again, it should be emphasized that it is the largest particles that create stability in a natural channel, and they need to be of adequate size to fulfill this role. It is not appropriate to compare sediment size estimates with channel reaches that are controlled by large wood, deeply incised or not in equilibrium.

In the interest of creating designs and specifications that are practical and economical, gradations should not be too restrictive. As long as a broad range of sizes is represented, a suitable bed-material mix should result.

Sediment-Gradation Example

The following example should help clarify the process of material gradation for stream simulation. Let's say that, using one of the methods described above, D_{84} has been determined to be 0.5 feet. Using the relations above, D_{16} = 0.06 ft, D_{50} = 0.2 ft, and D_{100} (the largest particle present) = 1.25 ft. What this means is that 16 percent of the material is less than three quarters of an inch, including roughly equal proportions of small gravel, sand and silt. Sixteen percent is between 0.5 to 1.25 feet, which, when viewed from above, will compose 1/6th of the channel surface. The remaining 68 percent is basically well-graded gravel and cobble. If a gravel pit is making up this mixture, then piles of material need to be assembled in proportions that approximate the desired gradation. One approach is to use parts or "scoops" of a given component. For the example mixture here, a very simple recipe could be: four scoops of six-inch-minus pit run with fines, plus one scoop of eight- to 15-inch rock.

Problems have arisen where the engineer does not examine the material at the pit. A specification such as "pit run" can describe materials with very different compositions, which, until someone actually looks at the material, may or may not meet the intent of the designer. The less a project is overseen by a qualified engineer, the more detailed the culvert fill-material specification must be.

Unless the pit supplying the materials can specifically state the composition of a given pile based on a grading test, it is often difficult to determine its composition and, therefore, its role in forming a given gradation. A simple method of doing so is to measure both the largest and smallest particles present, and gauge by eye the distribution of sizes in between. This assessment of distribution is just to determine whether the pile is well-graded or not. For instance, a pile composed solely of coarse gravel and sand is gap graded, missing the critical, intermediate-size classes that need to be present in streambed material. The result is a bracket that can be fit into the desired distribution. A far more complicated, time-consuming and probably unnecessary method is to sample the pile and either count and measure all the particles in the sample or randomly measure a given number of them. The first method is probably adequate for specifying materials for stream simulation culverts.

Rounded material is typically used in stream-simulation culverts. If one portion of the gradation is not available in rounded material, fractured rock is acceptable. In many areas gravel and cobble are available, but boulder-sized rock must be reduced from bedrock. Such a substitution is reasonable. On the other hand, bed material composed exclusively of fractured rock cannot be considered for stream simulation; its jagged edges will interlock, making it nearly impossible for bed material to migrate as it does in a natural streambed. Beds composed of angular rock will be more porous typically.

Bed-Material Placement

Culvert fill material is loaded into the pipe with a small Bobcat® style front-end loader, a small bulldozer, a gravel conveyor belt or a rail-mounted cart, or it is pushed into the culvert with a log manipulated by an excavator. As mentioned before, round, structural plate culverts can be loaded with material from the top if a number of the top panels are left off.

In order to achieve stream simulation, fill materials must be arranged to mimic channel conditions. Avoid grid patterns or flat, paved beds made of the largest rocks. A low-flow channel and secondary high-flow bench on either side should be created in the culvert. A step-pool profile generally occurs in the three- to10-percent slope range.[11] The spacing of steps is somewhat variable, but one to four channel widths with a maximum 0.8-foot drop between successive crests is recommended.[20] This type of channel ensures that stream energy is dissipated in pool turbulence, creating better fish passage and more stable channels. Segregating a portion of the coarsest fraction into bands can encourage this pattern. Do not exceed 0.8 feet of drop between successive steps. The steepest channels (greater than 10-percent grade) are cascades with large roughness elements protruding into the channel.

The same material comprises the whole depth of fill. Stratification, such as placing spawning gravel over a boulder fill in a steep channel, is not appropriate. Gradations such as "streambed gravel" and "spawning gravel" in themselves are not recommended culvert fills. Such material is washed and highly permeable. These gradations could, however, be a component in the specification of a well-graded mix.

Typically, the bed inside the stream-simulation culvert is filled to 30 to 50 percent of the culvert rise. The reasons for so much material are:

- to raise the channel to the widest part of the pipe (for round or pipe arches);
- to create a deep, monolithic bed structure; and
- to allow for significant bed adjustments without encountering the culvert bottom.

Bed-Retention Sills

Bed-retention sills are steel or concrete walls placed in the bottom of stream-simulation culverts to hold the bed material inside the pipe. Sills are not a desirable option, and their use does not really encourage stream simulation. They should be considered an option of last resort to hold bed material in the culvert. Culverts placed on a slope that is significantly greater than the adjacent channel or those that may experience large inlet-contraction scour should be considered roughened channels, (see Appendix E). The need for these sills reflects a lack of experience in sizing and placing stream-simulation bed materials under extreme conditions. They are, in that light, a safety factor. A bed-stability analysis should be done to determine the need for these structures. Bed-retention sills are used only in roughened channel culverts.

It has been hypothesized that concrete box culverts set at a steep slope may need concrete retention structures since concrete is relatively smooth and may not hold bed material as well as corrugated pipes. Shifting of bed material has not been observed in any project to date.

The crest of bed-retention sills should be V-shaped with a 10:1 slope laterally. They should be placed so that 20 percent of the culvert diameter is below the streambed as constructed in the culvert. The maximum drop between sills should be 0.8 feet, so that each backwaters the next from below, in case the bed material scours out.

Steep-Stream Simulation as an Experimental Technology

As previously described, stream-simulation designs can likely be built to slopes of 15 percent. Adequate information and field experience is not available for slopes greater than six percent, however. For that reason, designs for slopes greater than six percent should be considered as experimental and would require an experimental plan as described in Chapter 5, *Hydraulic Design Option,* under the section, "Roughened Channel." Suggested elements and minimum components of an experimental plan for steep-stream-simulation designs are as follows:

1. A study plan including specific, experimental objectives that will further the development of the concept. Include the range of hydraulic, biological and ecological conditions expected to challenge the project and anticipated responses. The study plan should also consider earlier research on projects similar to the one at hand, and it should include the following:

    - Background and assumptions behind design:
        - suitability of site: slope ratio, channel width, channel stability, channel type;
        - channel profile and cross sections;
        - pebble count; and
        - design flows and depths.
    - Design:
        - design bed mix,
        - intended bed configuration, and
        - transitions to existing channel.
    - Compliance: completed project must comply with the design drawings as verified by as-built drawings.

2. A contingency plan and a commitment to upgrade the facility according to this plan if it fails to function structurally for fish passage or as habitat. There should be clear definitions of what are acceptable and unacceptable conditions in the project that are agreed upon by the proponent and permitting agencies. The contingency plan should include:

    - The specific elevation of inlet and outlet bed surfaces, and upstream and downstream, stable channel-bed elevation. One cross section inside the culvert and one upstream should be included at an assumed stable point in the channel (greater than 35 feet upstream of inlet). These elevations are criteria for culvert performance.
    - Bed-material gradation must meet given, specified criteria, such as "50 percent of the particles must be larger than 0.4 feet."

- Numerical thresholds must be placed on these criteria. If thresholds are exceeded, then specific actions must take place, such as, "Replace bed material in culvert if inlet elevation drops below 924.1 feet."

3. A commitment to monitoring until such a time that the project has proven to perform under the range of design conditions and the closure process is complete. Monitoring should result in a report with a peer critique of the findings.

    - Profile and cross sections must be surveyed annually. Bed material should be measured and compared to the design mix annually. Assessment of passage through the project should be done annually by a qualified biologist or engineer.
    - If flows during the previous winter were low and no changes occurred in the bed or banks of the stream, no monitoring for that year may be necessary.

4. Closure of the experiment, which includes a process for acceptance of the facility by the permitting agencies. A specific time period should be stated (such as five years) after which the participating parties will meet to evaluate the project according to the design criteria. A judgment will be made at that time whether to approve the project, delay the approval to a later date or require that the project be modified or replaced.

Chapter 7 – Channel Profile

Regardless of the design option used, the culvert must match the future channel profile and elevation. The elevation of the culvert in the No-Slope and Stream-Simulation Design options depends upon the countersink criteria for each option and the natural channel elevation, including alluvial pools that may migrate through the culvert.

The Hydraulic Design Option includes the additional requirement to determine the high- and low-flow elevation profiles of the water surface for fish-passage design. Match the elevation of the water surface of the culvert to that of the downstream channel at the high fish-passage design flow. This is a conservative estimate of the water-surface profile. A backwater-profile analysis can be used to optimize the culvert design by taking advantage of the lower velocities created by the backwater to achieve the required maximum velocity. The low-flow backwater must also be checked. As required by WAC 220-110-070 criteria, the bottom of the culvert must be placed below the natural channel thalweg elevation at a minimum of 20 percent of the culvert diameter (or 20 percent of the vertical rise for other shapes). The downstream bed elevation, used for culvert placement, is taken at a point downstream at least four times the average width of the stream but not necessarily more than 25 feet from the culvert. Thalweg elevations may be higher further than that from the culvert, and they are appropriate to use. For explanations and definitions of terms such as channel width, see the Explanation of Data in Appendix F, *Summary Forms for Fish Fish-Passage Design Data*. These criteria are intended to reduce the risks of the bed scouring from within the culvert and to limit the risk of creating a future fish-passage barrier caused by the downstream channel degrading.

The characteristics of the adjacent stream reach determine the size, slope and degree of countersink of the pipe. A long, surveyed profile is essential for determining both the characteristics of the channel and the appropriate degree of countersink for the new culvert. Long profiles (20 channel widths or a minimum of 200 feet upstream and downstream from the culvert) reveal true channel slope and the expected extent of scour (see Appendix F for more information on profiles). The depth of pools within the reach indicates the depth of scour and, in turn, the appropriate elevation for the invert of culverts designed by the No-Slope and Stream-Simulation Design options. Pools that are a result of alluvial processes or debris accumulations that occur within the natural channel should be taken into account in design.

Consider also the potential variance in overall channel elevation during the life of the project. The natural elevation of an alluvial channel may change over time and is often affected by human-caused changes in sediment, debris and flow. Determine whether the channel is in equilibrium or disequilibrium (aggrading or degrading) or whether localized disequilibrium will be caused by the project. Estimate the potential variance in elevation of the bed and design the culvert for that range. This is important for all design options and most critical for designs that have rigid bed elements, including bed controls and culverts without natural streambeds.

Satisfying the countersink and velocity or no-slope criteria for a culvert often requires steepening the downstream and/or upstream channel gradients. This can be done by installing grade-control structures or a steeper, roughened channel, excavating bed material, allowing the channel to regrade without controls or a combination of these approaches (see **Figure 7-1a** and **7-1b**).

Figure 7-1a. Option 1: Downstrean Grade Control

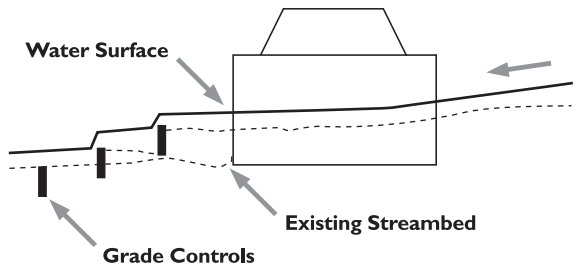

Figure 7-1b. Option 2: Upstream Regrade

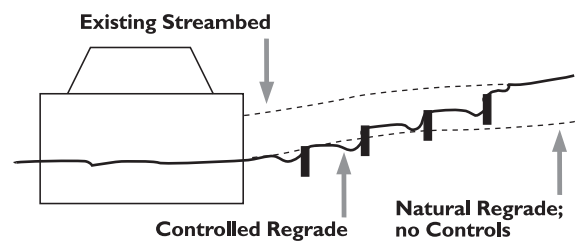

Channel-steepening options.

No single solution is the best answer for all situations. Often, choices among these options will be influenced by issues other than fish passage, such as property lines, habitat considerations, risk to infrastructure, or issues about flooding or erosion. These factors are described in this section. In addition, there are maintenance and habitat impacts resulting from rigid grade control in a dynamic stream environment.

The retrofit of an existing culvert will often require a steepened channel downstream. Other situations that lead to this need include the protection of an upstream wetland or other upstream habitat features or floodplain function, protection of structures or buried utilities, and the feasibility of a deep excavation for a culvert installation.

A culvert can provide a beneficial function as a nick point to prevent a degrading downstream channel from progressing upstream. Placing downstream grade controls and maintaining the culvert elevation as a nick point can be, in some cases, valuable for upstream habitat protection. Any grade-control structures must, of course, anticipate future degraded channel conditions. A simple way to prepare for continuing degradation is to bury additional control structures into the bed downstream of the visible project. These controls would become exposed and effective only as the downstream channel degrades.

If grade-control structures are built in the channel downstream of the culvert, they should be long-lasting and stable at the design elevation. This is required because the culvert is a long-term feature (25- to 50-year life) with a fixed elevation. Any loss or lowering of the downstream controls could result in another barrier at the culvert or structural risk to the culvert.

The upstream channel grade may be adjusted to fit a new or replacement culvert with an upstream invert lower than the existing streambed. Control structures upstream may either have rigid elevations or they may be expected to gradually adjust over time. This will depend upon the factors described in the next section. All or part of the upstream regrade may, in some cases, be allowed to occur uncontrolled.

The addition of channel-regrade structures or channel modifications to increase the channel slope extends the length of channel affected by the culvert installation. Habitat impacts, as discussed in Chapter 1, *Habitat Issues at Road Crossings*, may also have to be mitigated in the modified channel reach and may affect the design of the steepened reach.

Channel Headcut and Regrade Factors

A channel degrades when its bed scours and lowers over time either by natural process, by hydraulic changes in the watershed and/or by the lowering or removal of a control point in the channel. Channel headcut occurs when the upstream channel has been lowered locally by scour in response to a replacement culvert that has been enlarged and/or set at a lower elevation. The headcut itself is a steep section of channel that, as it erodes, migrates upstream and eventually lowers the entire channel for some distance. The same situation occurs if an undersized culvert is replaced with a larger one, since the flood hydraulic profile is lowered by the reduction of the culvert constriction. Habitat impacts of channel degradation can be extensive and prolonged. They can be managed by reconstruction of the upstream channel either into a natural grade or steepened with hydraulic controls.

A reach degrades when there is a net lowering of the bed elevation. During the initial stages of degradation, a channel will becomes deeper and narrower, the relative height of the banks increases and the banks steepen. Loss of floodplain connection and concentration of flows within the channel exacerbate the degrading process. Reinforcement of root structure is decreased. As a result of erosion, banks fail, and the channel then widens over a period of time until the channel re-establishes its natural slope, floodplain, bankfull width and depth at the lower elevation. This process is shown graphically in **Figure 7-2**.

Figure 7-2. Evolution of Channel Regrade

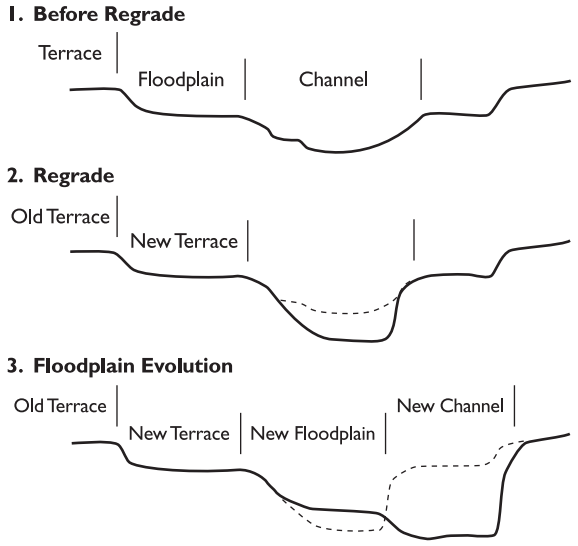

A variety of habitat impacts may occur during the degrading process. The most obvious is the erosion of the bed and habitat associated with it. The remaining bed is narrow, confined and usually consists of a steep run with little diversity because the channel has no floodplain for relief from high flows. Bed and bank erosion introduces additional sediment. A degrading channel may lower the ground water table to below the root zone, dewatering the bank and adjacent wetlands or side channels and affecting the survival of vegetation. This, in turn, may trigger secondary causes of erosion such as reduced vegetative structure.

Channels that are most vulnerable to the habitat impacts of a degrading channel are those that have functional floodplains, habitat diversity, and/or adjacent side channels or wetlands and channels with banks that are already oversteepened and on the verge of failure.

The following aspects should be part of the consideration for channel regrade. Detailed information on some of these issues may be required if the expected headcut is greater than about a foot in a gravel-bedded stream, less in a sand-bedded stream. Such information should include:

- extent of regrade,
- condition of upstream channel and banks,
- habitat impacts of upstream channel incision,
- habitat impacts to downstream channel from sediment release,
- condition of adjacent channel and the value of culvert as a fixed nick point,
- decrease in culvert and channel capacity due to initial slug of bed material,
- risk to upstream utilities and structures,
- potential for fish-passage barriers created within the degraded channel, and
- access.

Extent of Regrade

The extent of regrade depends upon the upstream bed slope and composition, the sediment supply to and through the reach, and the presence of debris in the channel. The length of regrade in cobble-bedded streams may be less than in shallow-gradient, sand-bedded streams. Sandy beds often regrade uniformly without increasing slope until they hit the next nick point of debris or larger bed material (several feet of regrade can headcut thousands of feet upstream).

A channel with high bed-load transport will be affected less by regrade and will reach an equilibrium condition more rapidly than channels with low bed-load transport. Structures and utilities must be identified in the upstream bed that might be exposed or affected by the degradation. Culverts should be designed to transport sediment at the same rate as the adjacent channel.

The upstream channel slope and bed composition influences sediment supply and the ability to maintain the bed inside the culvert. This is especially important in culverts that are dependent on the recruitment of material.

Condition of Upstream Channel and Banks

Two extremes of upstream bed condition are an incised channel and an aggraded channel created by the backwater of an undersized culvert. The incised channel and banks will be further affected by channel degradation. Any floodplain function will be further reduced, and instream habitat will be subjected to increased velocities and less diversity. Banks will become less stable as the degrading channel undermines them. An aggraded channel, on the other hand, can be stabilized and returned to its natural condition by allowing some degradation through it.

Habitat Impacts of Upstream Channel Incision

The channel of a degrading stream is narrow and confined, with little diversity and reduced stability because the channel has no floodplain for relief from high flows. Eventually, the channel may evolve back into its initial configuration, but substantial bank erosion and habitat instability may persist.

Wetlands have formed upstream of many undersized or perched culverts. These wetlands perform important functions in the riparian ecology and their fate should be carefully considered when replacing culverts. State and federal resource agencies have prepared the following guidelines, which are part of the Washington Department of Fish and Wildlife's *Road Impounded Wetlands* document, available on the department's Habitat website:

- As a basic principle, natural processes should be restored. Through an examination of the hydrologic and biological systems, the original form and function of the watercourse should be identified and restored.
- At the same time, we should strive for no net loss of habitat, function and acreage of wetlands where possible, and we should strive for an increase in the quantity and quality of wetlands when the opportunity arises.
- High-value wetlands that are important features in the local or regional ecosystem should be preserved.

- Wetlands that can serve an ecological function but have been lost or significantly diminished elsewhere in the system should be restored or preserved.
- For each instance, where a road fill and the associated culvert have created or increased a wetland, the wetland's fate is a negotiated decision between the landowner, the local Washington Department of Fish and Wildlife Area Habitat Biologist and any other agency that has jurisdiction in the case.

A wetland specialist should be brought in to assess important wetlands early in the culvert design process.

Habitat Impacts to Downstream Channel from Sediment Release

Aquatic habitats downstream will be at risk from the increased sediment released. In addition to the volume of material, sediment will be released at moderate flows until the upstream channel and banks have stabilized.

Decrease in Culvert and Channel Capacity Due to Initial Slug of Bed Material

Allowing an uncontrolled headcut upstream of a culvert may result in a slug of material mobilized during a single flow event. As this material moves through the culvert and the downstream channel, it can reduce the flood capacity of both. Less degradation should be allowed where the culvert has significant risk (even if it is a short-term risk) of plugging by bed material and debris. Similar limitations should be considered where structures downstream are at risk from a loss of channel capacity or where banks are at risk of erosion. Without further technical analysis of degradation implications and culvert flood capacity, a culvert inlet should be depressed to no more than 40 percent of its rise or diameter. Relevant factors to consider include design-flow probabilities, bank height, culvert dimensions, substrate material and allowable headwater depth.

Proximity of Upstream Utilities and Structures

If a regrade is allowed to continue upstream, it can jeopardize structures in the channel or on the banks. Be aware of buried utilities under the channel and the risk of increased bank erosion on structures on or near the channel banks.

Potential for Fish-Passage Barriers Created Within the Degraded Channel

The last headcut consideration is the potential for fish-passage barriers to be created within the degraded channel. Buried logs and sills made of compacted till or clay are commonly exposed by channel headcuts. As the channel headcuts to these features, they become the new nick point and fish-passage barriers. Adding to the difficulty, these problems may occur where they are not visible from the project site, and they may occur on other properties, making them more difficult to address.

Access

Impacts to the channel, riparian structure or infrastructure caused by equipment access for upstream or downstream channel construction should be considered in the selection and extent of upstream and downstream components.

Channel-Profile Structures

Descriptions of several grade-control designs are provided in **Table 7-1**. These techniques, and any combination of them (with a few exceptions), can be used to control channel grade either upstream or downstream of a culvert. When used downstream of a culvert, they are intended to backwater the culvert and stabilize a steepened channel reach. Clearance between culvert outlet and downstream grade control should be a minimum of 20 feet. When used upstream of a culvert, they are intended to stabilize a steepened reach to prevent or control a headcut and channel degradation. Upstream grade control can have a strong effect on bed stability inside the culvert. Turbulence created by the drop tends to scour out the inlet and occasionally the entire bed inside the culvert. A minimum clearance of 35 feet (where possible, 50 feet) should be allowed between the outlet and the structure. Each technique has advantages and disadvantages as summarized in **Table 7-1**.

Table 7-1. *Comparison of channel-profile designs.*

Tools	Advantages	Disadvantages	Limitations
Log Sills	Downstream bed-elevation control.	Limited to < 5% final gradient. (Affects length to catch channel grade).	Minimum spacing of 15 feet. Limited to < 5% gradient. Allowable drop depends upon fish requiring passage.
Baffles	Increases hydraulic roughness.	Turbulence, hydraulic profile raised, debris problems. No small-fish passage.	Slope less than or equal to 3.5%.
Plank Sills	Hand labor.	Less durability.	Limited to < 5% gradient streams, small streams.
Roughened Channel	Natural appearance, flexible, can provide passage for all fish.	Technical expertise required. Technical fish-passage analysis required.	Limited to < 3% gradient streams, moderate streams.
Boulder Controls	Flexible, allowing channel to regrade slowly.	Not recommended downstream of culverts. Will degrade over time.	Maximum drop of 9".
Fishway	Can provide passage for most fish.	Expensive. Technical expertise and site-specific, flow-regime data required. Debris and bedload problems.	Narrow range of operating flow. Difficult to provide passage for all fish, all of the time.

Log Sills

Log sills can be built into the streambed to span the entire channel width. They are a low-cost and durable means of fish passage for streams with natural gradients of less than about three percent and channel toe widths of less than about 30 feet. The log sills described here are intended for fish passage. Similar designs are used with the objectives of enhancing rearing or spawning habitat or stabilizing certain channel-erosion problems. Those designs may be different from those described for fish passage, and they are not discussed here.

Log sills have been used in many situations to create a series of drop structures to raise the downstream water surface and backwater a culvert. They are typically used downstream of a culvert, but may also be used upstream. A variety of designs have been employed, including single logs, multiple logs, straight weirs, angled weirs, V-weirs and K-dams. Simple, straight, double-log sills described here are the most secure, require the least overall channel length and are the least costly of the styles.

Channel Slope

A maximum gradient of five percent for streams with typical rainfall-dominated hydrology is required for the use of sills installed in a series. Anything steeper than that will affect fish passage. Steeper slopes may not dissipate energy adequately and are, therefore, not stable and/or create downstream impacts. Log sills are intended to support the streambed, which protects and seals the log weirs. A closer spacing (higher slope) causes the scour pool of each log to extend to the next sill downstream and, therefore, does not allow the accumulation of bed material necessary to protect the upstream face of the sill. The exception is for small, spring-fed streams that don't experience extreme high flows.

WAC 220-110-070 limits the hydraulic drop at any point in the culvert to 0.8 feet or one foot depending upon the species present. Logs are typically installed in a series, with a spacing about equal to that of the channel width and a minimum spacing of 15 feet. A 20-foot spacing and one-foot drop (or 15-foot spacing and nine-inch drop) yields the suggested maximum slope of five percent.

Because of the recommended maximum slope for a series of log style sills, it is difficult to steepen a channel with a natural slope greater than about three percent. Control structures in small, spring-fed streams may exceed the five-percent gradient criteria.

Design Details

A pair of logs, each with a minimum diameter of one foot, are placed into the streambed. It is recommended that the sum of the diameters at any point along the structure be at least 2.5 feet. The pool below each sill will scour to a depth greater than two feet below the downstream control elevation. A good rule of thumb to control deflection of the top log is to use a log with a diameter 1/25th of the log length.

Double logs are used to prevent the scour pool from undermining the structure. The ends are buried into trenches excavated into the streambanks a minimum of five feet. The logs are normally Douglas fir due to its availability, straightness and resistance to decay. Their longevity is enhanced by being installed level so they are permanently submerged.

Log controls built in accordance with Washington Department of Fish and Wildlife standard details as early as 1984 were still in good condition 17 years later.

The bottom log is offset upstream on a line about 45 degrees from vertical to allow the scour to undercut the upper log. The top log is strapped to precast concrete blocks buried below each end of the sill and sized adequately to anchor the logs. Careful anchorage or ballasting of the logs is critical to their stability. The structural integrity of the log sill depends entirely on the ballast blocks. Well-graded rock placed on the ends of the structure serves as closure for the installation trench and protection for the backfill; it is not used for anchorage.

A seal is attached to the upstream face of the top log, and buried two feet below the streambed, extending upstream at least six feet. Geotextile fabric is used with a tensile strength of at least 600 lbs. and a burst strength of at least 1,200 lbs. Geotextile fabric has the advantages of longevity, availability and flexibility for ease of construction. It is easier to install than impermeable material, which tends to billow in the stream current during installation. The fabric must be extended into the trenches to completely seal the structure.

Well-graded riprap or riprap mixed with soil is packed over the ends of the logs within the trenches and on the banks, extending to six feet downstream of the sills. The riprap serves as bank protection, not ballast. The well-graded rock mix prevents flow from plunging into the voids and promoting piping around the structure. A pool is excavated two feet deep by six feet long in the channel downstream of each log sill in preparation for the natural formation of a scour pool. If a pool is not initially constructed, there is a risk that the first high flow will stream over the sills and energy will not be adequately dissipated, resulting in downstream channel erosion. The bank rock must extend to the floor of the pool. For installations where bed material does not pass into and through the fishway, the floor of the pool should also be lined with riprap rock.

Knowledge gained through observation indicates that the maximum fish-passage design flow is limited to about 9.5 cfs per foot of length of the log sill. The maximum, safe, high design flow has not been quantified. The highest known flow safely experienced by a series of log sill structures is 15 cfs per foot of length. The weir coefficient for a log weir submerged to 50 percent of its depth is approximately 2.7, based on field measurements. Heiner[20] found that a weir coefficient of about 3.8 for full-scale, unsubmerged nappe, smooth (PVC pipe) weirs in a laboratory.

Sills should be located in straight sections and at the entrance and exits of channel bends; they should not be installed in the bends themselves. There is a risk that if a lower sill of a series fails, those above it will be undermined and also fail in a chain reaction. If a number of bed sills are placed in a series, deeper sills should be placed at intervals (every fifth sill). The deeper sills should be designed as independent dams, assuming the downstream controls do not maintain a backwater. Their purpose is to prevent the chain reaction and the failure of the entire series.

When used for fish passage, sills within a series should be constructed with equal lengths for uniform hydraulic conditions at high flows. Energy is often not dissipated over log controls during peak floods. The downstream channel is, therefore, scoured and lowered in the vicinity of the logs. To prevent a barrier from occurring below the downstream sill, additional downstream sills should be constructed at or below the channel grade.

A notch is cut in the crest of the sill after it is installed to assist with fish passage. The shape and size of the notch depends upon the fish species requiring passage and the low flow expected at the time of passage. The notch generally slopes down to form a plume that fish can swim through rather than having to leap through a free nappe. Be careful to not make the notch so large that the top of the log is dewatered at low flow.

Single or multiple log sills can be cabled into bedrock channels using 9/16-inch galvanized steel cable with HILTI HVA® combined with HY-150® dowelling cement.[21] A new HILTI adhesive product called HIT-RE 500® appears to be the better choice, since it can be placed while submerged underwater and does not have as high a tolerance requirement for the boring of holes. (HIT-RE 500® is provided as an example of what is available; its mention is not intended as a product endorsement.)

Plank Controls

Plank weirs can be substituted for logs in very small channels and hand labor is available or preferred over the impact of equipment use. Rough-cut, milled timbers are placed across the bed of a channel to form sills similar to log sills. They are intended to be constructed by hand in small or spring-source streams with regular flow. They are installed with a maximum drop between pools of eight inches. When installed in steady, spring-source streams, a series of plank sills can be installed at a slope up to seven percent. Plank sills have an application limited to channel toe widths of about 10 feet. The maximum standard timber length available is 16 feet; each end is embedded three feet into the bank.

Untreated fir timbers are used in perennial streams where the wood will always be submerged. Cedar is used in intermittent streams. The planks are trenched into the bed of the channel and anchored with U-bolts to steel pipes driven into the streambed. They are tilted about 20 degrees downstream so the nappe spills free of the sill for better juvenile fish access. The ends are buried in the channel banks, and the excavated trenches are filled with light riprap rock mixed with soil.

Plank sills are especially useful for providing upstream, juvenile-salmon passage. They are well-suited for streams with sandy beds. A benefit of plank sills is they can be constructed entirely by hand, thereby reducing construction impacts. Plank sills have been constructed in wide channels using zigzag and spider-weir designs to shorten the span lengths of individual members. They are primarily intended for juvenile fish passage.

Roughened Channel

A roughened channel is a graded mix of rock and sediment built to create enough roughness and hydraulic diversity to steepen the channel and provide fish passage. The roughness controls the velocity, and the flow diversity provides migration paths and resting areas for a variety of fish sizes through local higher-velocity and turbulence areas.

Principles of roughened channels that are described in Appendix E, *Design of Roughened Channels* can be used to design open channels outside of culverts. The design should be very conservative for steepening channels downstream of culverts or other fixed structures where any degrading of the channel will result in the culvert countersink or velocity criteria to be exceeded. The culvert should be countersunk deeper than normally required with the expectation of some degrading of the backwater control. The roughened channel is acceptable upstream of culverts to control channel headcutting.

Boulder Controls

Low boulder sills have been built for many years (though with mixed reviews). Most have deteriorated and disappeared over time. They are, therefore, not generally a desirable bed-control option where a precise control elevation has to be preserved for the life of a culvert. They may have an application where the culvert upstream will be replaced within a few years. Improvements in design and construction of this technique may eventually allow their use downstream of culverts.

A common, acceptable application of this technique is to control channel regrade upstream of a culvert that has been enlarged and/or lowered. Since the rock controls tend to fall apart over time, they gradually change from a drop structure to a low cascade and eventually to a short, roughened channel. Gradual, channel-regrade processes may be less impacting than a sudden change, especially in terms of sediment release.

Boulder controls used to temporarily control regrade are built as arch structures with the arch pointing upstream. Each boulder is securely placed against the boulder next to it, and the downstream boulders are embedded into the bankline. In cross section, the crest of the weir slopes toward the middle and approximates the cross section of the stream.

Additional work is needed to improve the design of boulder controls intended as permanent structures. Sizing, shape and placement of the boulders are essential to the longevity of the structure. A minimum of two rows of rock form the weir. One row creates the crest over which the flow drops; the other row is below and slightly in front of the crest and prevents scour beneath the top row. Boulders used for weir and foundation rocks should be sized on the basis of the stream design discharge and slope. Small, lower-gradient streams should use a minimum two-foot mean-dimension rock. Larger, high-gradient streams require rock as large as four to six feet mean dimension or two times D_{100}.

Boulders are best installed using equipment that can rotate the rock to allow precise fitting. Careful attention must be paid to how the weir boulders are fit into the foundation boulders to ensure that they are stable and gaps are reduced to a minimum. Ideally, each boulder should bear against its downstream neighbor so that the thrust of stream flow and bedload is transferred through the weir to the bank (push on each boulder in a downstream direction on as it is placed to see that it will not tip under load).

Concrete or Sheet-Pile Weirs

Using precast concrete weirs is an option for rigid controls. One type of design calls for a series of concrete beams stacked to the required height and bolted together. Another design includes a weir, stilling basin, and wing walls in a single precast unit.

An advantage to concrete weirs is their self-ballasting feature. Concrete highway median barriers and ecology blocks are not acceptable as fish-passage weirs unless they are anchored for stability, modified to provide a sharp crest and a deep plunge pool, and permanently sealed to prevent leakage. Potential disadvantages are aesthetics and the equipment and excavation required to place heavy, precast units.

Chapter 8 – High-Flow Capacity

Regardless of the design option used, the high-flow capacity of the culvert must be checked to ensure stability during extreme flow events. The high fish-passage design flow usually controls the culvert design rather than the flood capacity. The high-flow capacity must be analyzed to confirm this for each culvert design. WAC 220-110-070 specifies that "culverts shall be installed according to an approved design to maintain structural integrity to the 100-year peak flow with consideration of the debris loading likely to be encountered." This can be done by providing adequate flood and debris capacity, designing a spillway for overtopping or routing excess flow past the culvert without jeopardizing the culvert or associated fill.

The high-flow capacity can be determined by road-fill stability, road overtopping, allowable headwater depth or the likelihood of debris plugging the culvert. Selection of additional, high-flow-capacity parameters depends upon requirements of the culvert owner and are not discussed further here.

The design of a new culvert should provide mitigation for future design flows as land use changes. Usually the size and shape of the culvert, as developed by the design processes described in this guideline, will be adequate to pass most debris and bed material. A culvert designed by the hydraulic-design method may not have adequate size for debris passage so an alternative design may be required. If vertical instability is suspected, a culvert design may not be practical or even functional, so a bridge should be considered instead.

Chapter 9 – Tide Gates and Flood Gates

This chapter addresses fish-passage issues associated with tide gates and flood gates. These devices are, in principle, check valves that allow water to flow through in only one direction. Tide and flood gates are intended to control tidal or floodwater fluctuations, respectively. The actual device used to meet this objective might be a flap gate, a slide gate, a swing gate or a pinch valve.

Issues other than fish passage will often regulate whether a tide or flood gate is appropriate and determine specifics about the design. Some examples include water quality, groundwater levels and sediment retention. These issues are mentioned later in this chapter under Other Ecological Considerations.

Tide- and Flood-Gate Styles

Flap gates, swing gates, slide gates and pinch valves are styles of devices used as tide and flood gates. The flap gate usually consists of a flat plate that is hinged horizontally at the top of a culvert outfall. The plate falls into a near vertical position over the face of the culvert to close it. A positive head differential against the downstream side of the plate face forces the plate against the rim of the culvert to seal it. A positive head differential against the upstream side of the gate will force it open to release water.

A swing gate (barn-door style) is essentially the same as a flap gate except the hinge is on the side and oriented vertically. Since the swing gate is mounted vertically like a door, its weight does not cause it to close by itself.

A pinch valve is a flexible pipe extension that is an alternative to flap gates but, as explained below, does not provide fish passage. A pinch valve, such as a Tideflex®, can eliminate operational and maintenance problems associated with flap gates, including corrosion of mechanical parts, warping that causes in-flow leakage and clogging due to trapped debris. (Tideflex® is provided as an example of what is available; its mention is not intended as a product endorsement.) Pinch valves have no moving or mechanical parts, can operate at extremely low head loss and are silent.

The typical objective of tide gates is to control the upstream water surface, thereby minimizing flooding or tidal inundation. It is important to establish the specific upstream water surface that is allowable. Tide gates, when installed, are usually intended to protect only from extreme high-tide flooding, so they don't need to be closed more than a few times a year. In practice, however, they are closed during a majority of the time.

Tide gates are typically attached to culverts that are placed through dikes at slough entrances where there is a tidal influence. Flood gates are placed where there is an influence from a freshwater source such as a river during flood stages. Tide and flood gates allow the water to drain downstream but prevent high tides or river floods from backing water into the stream channel, thus protecting low-lying property from being flooded. Tide gates are also used at dikes on tributaries and on floodplains not necessarily associated with specific drainage networks.

Historically, tide and flood gates were constructed of cast iron or wood. Plastic, fiberglass and aluminum gates are also available and are preferred because the lighter gates open easier for better fish passage. Larger gates are typically constructed of wood and are often hinged at the sides rather than the top.

Today's designs include float-operated gates, such as self regulating tide gates (SRT®), automatic electric-powered slide gates that allow a specific and variable fish-passage operating range and pinch valves (such as Tideflex® check valves) to prevent fish access. Float-operated gates don't necessarily provide optimal fish passage. However, they do allow precise control of the tide-gate closure so fish blockage occurs only at specific water levels; and fish passage is, therefore, better than it might be otherwise. The swing gates built by the U.S. Army Corps of Engineers in Cosmopolis, WA are also tide-actuated. A float operates a trigger that allows the gate to close at a specific elevation.

In other applications, ensuring that fish are not attracted into pipe outlets or to eliminate a backflow problem while providing a safer, cleaner environment may be of paramount importance and pinch valves may be appropriate. Pinch valves prevent any fish passage and keep fish out of undesirable areas.

Fish Passage

When partially or completely closed, tide and flood gates are barriers to all upstream fish migration. Unless specifically designed and positioned vertically for fish passage, most are also a barrier to migration when they are open because they don't open far enough or frequently enough.

Tide and flood gates can be fish passage barriers due to the head differential across the gate causing too high a velocity or by the narrow opening available for passage when the gate is only slightly open. Tide gates and flood gates may also be a barrier, like any other culvert, if they are perched above the downstream channel or water surface by more than 0.8 feet. The elevation at which the gate becomes a barrier is likely something less than 0.8 feet when it is in combination with a narrow opening. There are several ways to design tide and flood gates to maximize fish passage through the gates. These include:

- gate orientation,
- gate material,
- gate operators and latches,
- orifice gates,
- hydrology considerations, and
- multiple installations in parallel.

Gate Orientation

The first consideration for maximizing a tide or flood gate's fish-passage capability is to modify the gate-mounting hardware so that the gate hinge is rotated 90 degrees and mounted vertically on the side. This is called a swing gate or "barn door" style gate. Standard gate hardware may have to be modified to structurally support the gate, to keep it from opening too far and to provide a thrust bearing for the weight of the gate. The gate should be mounted at an angle slightly less than 90 degrees. If it is rotated a full 90 degrees, the weight of the gate will not help close it. The hinge of a gate mounted with a 90-degree rotation may have to be modified to support the bearing weight and moment forces of the gate on the hinge.

Gate Material

Another consideration is to use lightweight materials to construct the gate. Lighter materials such as plastic or aluminum can be formed into a thin, dome-shaped gate. Because they are considerably lighter than wood or cast iron and create less resistance, they open much wider, and there is less head differential. As a result, lightweight gates have greater out-flow capacity.

Conditions for upstream fish passage should be less than 0.8 feet of head differential and at least a foot of gap opening. The gap is defined here as the maximum opening of the gate. For flap gates, it is the distance the bottom of the tide gate swings away from the culvert rim or frame.

There are no conditions of head, gap and submergence for cast iron gates that comply with fish-passage criteria. For example, to create a gap opening of one foot, a head differential of two feet and a submergence of two feet are required for a four-foot-diameter, cast-iron gate. The one-foot differential complies with the fishway criteria only for orifices and swing gates. Submergence is defined as the depth of the downstream water surface above the bottom of the gate when it is closed. The two feet of head differential creates a fish-passage velocity barrier. Flap gates create barriers that are a combination of gap alignment, gap opening and velocity. The head-differential criteria for flap gates must, therefore, be reduced to a point where the gap opening for cast-iron gates is often a fraction of an inch, at which point they become impractical.

For any given gate submergence (downstream water level) and gap, the aluminum gate has considerably less head differential. An aluminum gate of the same size and with the same submergence and gap conditions as described for the cast-iron-gate example above, the head differential is just 0.5 feet.

The lighter plastic or aluminum gate also has much greater flow capacity at any submergence and head. The upstream pool will then drain more rapidly and approach optimum fish-passage conditions. A remaining fish-passage concern here is that the velocity inside the pipe is less than the velocity criteria required for culvert pipes to allow fish to transit the area.

Gate Operators and Latches

A third consideration for proper fish passage is the design of gate operators or latches. A tide gate can be equipped with an automatic latching mechanism to open and close the flap as needed, based on the water elevation. Operators, floats and latches have been designed to prevent the tide gate from closing until the water surface rises to an agreed upon elevation. An SRT® gate is equipped with a float mechanism that trips a latch, allowing the gate to swing shut. Slide gates can use an electrically powered actuator to automatically close and open in response to the water surface. This type of gate has the greatest flexibility of operation. It can be programmed to create variable tides upstream of the culvert. This SRT® gate is more expensive than simple flap gates and has a greater risk of mechanical failure due to its mechanical complexities, though it is useful where control is needed at variable tide elevations. This type of gate has not proven to provide reliable, unimpeded fish passage.

Orifice Gates

An alternative to installing fish-friendly gates on the culvert in tidal situations is to include an orifice in the tide gate or place a smaller culvert with a tide gate next to the main culvert. The orifice controls the amount of seawater passing upstream at every tidal cycle. With a good design, the volume of water that flows upstream during an extreme tide will not exceed the allowable storage volume and flood elevation above the culvert. This method was used in Brown Slough near the mouth of the Skagit River (Skagit County, WA), where a culvert was specifically sized to allow partial tidal inundation. E. M. Beamer and R. G. LaRock[22] found an equal density of zero-age chinook upstream and downstream of the culvert within the first rearing season following construction. It's important to note that the orifice design applies only to tide gates; flood-gate installations normally have too long a closure period for the orifice to be useful.

Hydrology

As explained earlier in this guideline, the Washington Department of Fish and Wildlife's fish-passage criteria must be satisfied 90 percent of the time during the migration season. In tidally controlled situations, a combined analysis of tidal influence and stream flow is necessary to evaluate whether this criterion is satisfied. This may require the analysis of tidal data in time increments and a continuous hydrologic-simulation model such as U.S. Environmental Protection Agency's Hydrological Simulation Program - Fortran (commonly referred to as "HSPF") or Storm Water Management Model (commonly referred to as "SWMM") for the stream flow. Any gate that is closed an average of just a few hours a day cannot meet the state's fish-passage criteria 90 percent of the time. See the discussion on Culverts in Tidal Areas in Chapter 5, *Hydraulic Design Option* for more details.

Considering the difficulty in achieving the standard fish-passage criteria, new tide-gate installations are not generally permitted, and tide-gate removal is a preferred action for restoration. Where removal is not possible but there is a need to achieve the best possible fish-passage restoration, objectives that are different from the standard fish-passage criteria might be acceptable. Defining alternative objectives should be done in conjunction with a careful and thorough review of allowable, upstream water levels and timing. Passage goals have been developed for specific projects to provide fish passage. As an example, tide-gate retrofits have been constructed such that the fish-passage hydraulic criteria are exceeded no more than four continuous hours at any time during the fish-migration season. In that case, the tide gate remains effective most hours of all days. Temporary fish blockages would occur for several hours at the slack period of the highest tides. The hydraulics of tide gates must be modeled to evaluate upstream water-level fluctuations, water quality and fish passage.

Multiple Installations in Parallel

When tide or flap gates are placed on multiple culverts at a site, lightweight gates should be placed on one or a few culverts, and they should be placed at a lower elevation. If all gates in a group are lightweight, they will compete for flow and may still not open sufficiently for fish passage. When just a single or a few gates are intended for fish passage, they open wider and open more frequently at low flow and stay open longer during an incoming tide.

Other Ecological Considerations

The ecological impact of tide and flood gates in estuaries goes beyond being fish-migration barriers. C. A. Simenstad and R. M. Thom[23] found that a number of environmental factors are affected by tide gates. They modify hydrology, vegetation and the general ecosystem functioning of coastal wetlands. Among these factors are surface-water and groundwater elevation, sedimentation, salinity, soil texture and creek morphology. Their influence on water quality may be substantial. A saline marsh can be converted to a freshwater marsh when it is located upstream of a tide gate. When saltwater estuarine habitats are lost or degraded, so are the important and unique functions they provide, such as shoreline stability, water quality, trophic energy (food web) support, fish and wildlife habitat for different species, recreation, promotion of biodiversity, and the maintenance of microclimate characteristics. The importance of hydrological connection has been repeatedly emphasized by other researchers.[24,25]

These environmental impacts drastically alter the basic chemistry, tidal characteristics and ecology of the upstream area. Such changes likely work cumulatively and in concert with the migration-barrier impact to further affect fish production.

To make tide and flood gate projects a success, the surface-water hydrology of the upstream contributing basin must be well understood; prerestoration surface-water elevation must be determined, and salinities and soil texture should be known. The ground may have subsided as a result of tidal action being excluded from the site. Estuarine processes must be understood within the context of the current ground elevations.

Water Quality

Since tide gates block upstream inflow for estuaries, they block the movement of saltwater upstream and the mixing with fresh water, causing a natural estuary with a salinity gradient to be converted to a freshwater marsh. Meanwhile, on the downstream side of the tide gate, an instantaneous change to high salinity occurs at the outfall. This requires migrating salmonids to adapt themselves immediately to the saltwater environment because there is no longer a gradual mixing of saltwater and fresh. The same action of blocking inflow also prevents temperature mixing in the estuary. If the stream is a different temperature from the saltwater, the transition point becomes sudden, rather than gradual, occurring at the tide-gate outlet instead of being dispersed throughout the estuary.

When such a situation occurs, when salinity and temperature impacts are concentrated at the tide gate itself, migrating fish cannot willfully select their preferred temperature and salinity conditions. Once fish pass through the tide gate, they are instantly dropped into a radically new water-quality environment with no opportunity to move out of it.

Additionally, salinity and soil texture control the presence of certain types of salt-marsh plant species. Changes in salinity results in change in vegetation. Experience from Colony Creek in Skagit County, WA showed that cattails, growing in an area that used to be too saline for them, trapped sediment and caused increased flooding. A remedy to the flooding was to restore the salinity of the estuary with the objective of eventually killing off the cattails.

Water Level

Because of their hydraulic control, tide gates are usually installed to minimize the upstream water-level fluctuation. When used on a stream that empties into Puget Sound, the upstream water surface would be regulated to within just a few feet instead of the normal fluctuation, which typically ranges between five and 18 feet.

Surface-water elevation and ground elevation are the principal controls of marsh hydrology and vegetation. The height of the land elevation in relation to the depth of water affects tidal flooding. The presence of groundwater and the bottom elevation, in turn, determines the type of emergent salt-marsh vegetation.

Channel Dimensions

A natural estuary is characterized by tidal-surge channels created by the rush of tidewaters in and out. Conditions upstream of a tide/flap gate are altered by the change in hydraulic conditions of the tide gate impoundment. A tide gate essentially eliminates the surging tidal flow. As a result, the upstream channels tend to fill with sediment and modify channel geometry.

Chapter 10 – Fishways

Fishways are formal structures that include specific features to optimize fish-passage conditions, providing maximum vertical gain over a given distance. Fishways applied at culverts typically consist of a pool-and-weir style; that is, a series of pools separated by weirs that control the elevation differential between pools. A fishway could be designed in parallel with the stream so fish moving upstream leave the stream and enter the fishway, move through the fishway, and then re-enter the stream or culvert. They can also be designed as instream features so that the weirs span the channel or culvert, and the entire stream flow goes through the fishway. Log sills described in Chapter 7, *Channel Profile* are a form of pool-and-weir fishway. Though they may function similarly, baffled culverts and roughened channels are not fishways in the context of this guideline.

Fishway detail and design guidelines are available from the Washington Department of Fish and Wildlife and will be presented in an upcoming guideline in the Aquatic Habitat Guideline series, *Fishway Guidelines for Washington State.* An interim copy is available at www.wa.gov/wdfw/hab/ahg/fishguid.pdf.

The primary limitation of a pool-and-weir fishway is the narrow range of stream flow through which they operate effectively. The upper limit of operation is reached when there is not sufficient volume in the pools to dissipate the energy entering them. The resulting turbulence impedes successful fish passage. This type of fishway is also vulnerable to debris and/or sediment plugging and, therefore, requires substantial maintenance effort. These factors limit the use of pool-and-weir fishways in association with culverts, so specific engineering expertise is necessary for their successful design.

This discussion of fishways is limited to some general concepts that govern the size and location of a fishway. Designers should consult with a fish passage engineer for specific design details. The following general criteria are adapted from the Washington Department of Fish and Wildlife Fish Passage Policy (POL-M5001). Only the criteria that are not covered elsewhere in this guideline are included here. Criteria not included relate to target species and the fish-passage design flow which have already been addressed in Chapter 5, *Hydraulic Design Option.*

Fishway Siting

A fishway must be located so the entrance is near the furthest point upstream that is accessible to fish. Hydraulic and layout design of the fishway must optimize attraction and entry to the fishway. Turbulence below the barrier must be considered when siting the fishway entrance. The fishway must be located so that the instream maintenance necessary to provide a continuous water supply and fish access to the fishway is minimized.

Hydraulic Design

The hydraulic design must optimize passage for the weakest species of fish expected to encounter the barrier. Fishways may either consist of a steep channel designed with appropriate velocities and turbulence limits or a series of distinct pools in which the energy of the flow entering the pool is entirely dissipated.

Fishway steps for adult fish that leap (e.g., chinook, coho, sockeye, steelhead, trout) shall not exceed 12 inches in height. Fishway steps for adult fish that do not leap (chum, pink) must not exceed nine inches. Flow condition at weirs for nonleaping fish must be optimized to allow swim-through conditions. Creating notches in the steps will cause the flow to stream rather than plunge, thereby slowing velocity down to a level appropriate for the species requiring passage.

Fishway pools and corners must be designed to minimize unnecessary turbulence and upwelling. They must be designed with enough effective volume for effective dissipation of the energy entering the pool. The effective pool volume must be at least enough to dissipate four foot-pounds per second per cubic foot. Pool volume more than eight feet away from a plunge does not effectively contribute to energy dissipation. Exceptions to this volume standard might be appropriate at facilities where fish passage is isolated from a high-energy-flow bypass. The minimum depth in the fishway pools must be three feet. Minimum wall freeboard must be three feet to prevent fish from leaping out of the fishway.

Maintenance

The risk of obstructions or hydraulic interference by debris must be minimized by providing adequate clearance at slots and access for inspection and maintenance. Fishways should be protected by a trash rack or trash boom where appropriate.

References

[1] Peck, S. 1998. Planning for Biodiversity. Island Press, Washington D.C. 1998.

[2] Powers, P. D. and K. Bates, et al. 1997. Culvert hydraulics related to upstream juvenile salmon passage. Washington Department of Fish and Wildlife, Land and Restoration Services Program, Environmental Engineering Services.

[3] Powers P. D. and C. Saunders. 1994. Fish Passage Design Flows for Ungauged Catchments in Washington. Washington Department of Fish and Wildlife Internal Report.

[4] Rowland, E. R. 2001. Predicting Fish Passage Design Flows at Ungaged Streams in Eastern Washington. Washington State University. Masters Thesis. Department of Civil and Environmental Engineering.

[5] Chow, V. T. 1959. Open-Channel Hydraulics. McGraw-Hill, New York, NY.

[6] Rosgen, D. L. 1994. A classification of natural rivers. Catena, 22:3:169-199.

[7] Schumm, S. A., M. D. Harvey and C. C. Watson. 1984. Incised Channels: Morphology, Dynamics and Control. Water Resources Publications, Littleton, CO, p. 200.

[8] Olsen, D. S., A. C. Whitaker and D. F. Potts. 1997. Assessing stream channel stability threshold using flow competence estimates at bankfull stage. Journal of the American Water Resources Association, 33:6:1197-1207.

[9] Bathurst, J. C., W. H. Graf and H. H. Cao. 1987. Bed Load Discharge Equations for Steep Mountain Rivers, in Sediment Transport in Grave-Bed Rivers. C. R. Thorne, J. C. Bathurst, and R. D. Hey (Editors). John Wiley and Sons, pp. 453-492.

[10] Grant, G. E., F. J. Swanson and M. G. Wolman. 1990. Pattern and origin of stepped-bed morphology in high-gradient streams, Western Cascades, Oregon. Geological Society of America Bulletin 102: 340-352.

[11] Montgomery, D. R. and J. M. Buffington. 1998. Channel classification, processes, and response. In Neiman and Bilby, Ecology and Management of Pacific Northwest Rivers. Chapter 2.

[12] Bathurst, J. C. 1987. Critical Conditions for Bed Material Movement in Steep boulder-Bed Streams. International Association of Hydrological Sciences Publication 165:309-318.

[13] Costa, J. E. 1983. Paleohydraulic reconstruction of flash-flood peaks from boulder deposits in the Colorado Front Range. Geological Society of America Bulletin 94:986-1004.

[14] Mussetter, R. A. 1989. Dynamics of mountain streams. Dissertation. Colorado State University, Fort Collins, CO. p. 398.

[15] Judd, H. E. and D. F. Peterson. 1969. Hydraulics of Large Bed Element Channels. Utah Water Research Laboratory, College of Engineering, Utah State University. p. 115.

[16] Limerinos, J. T. 1970. Determination of the Manning coefficient from measured bed roughness in natural channels. U.S. Geological Survey Water-Supply Paper 1989-B.

[17] Jarrett, R. D. 1984. Hydraulics of high-gradient streams. Journal of Hydraulic Engineering, 110:11.

[18] Ergenzinger, P. 1992. Riverbed adjustments in a step-pool system Lainbach, Upper Bavaria. In P. Billi, R. D. Hey, C. R. Thorne, and P. Tacconi, editors, Dynamics of Gravel-bed Rivers. John Wiley, New York, NY.

[19] Chin, A. 1998. On the stability of step-pool mountain streams. The Journal of Geology, 106:59.

[20] Heiner, B. A. 1991. Hydraulic analysis and modeling of fish habitat structures. American Fisheries Society 10. pp. 78-87.

[21] F.A. Espinosa and K. M. Lee. 1991. Natural propagation and habitat improvement Idaho: Lolo Creek and Upper Lochsa, Clearwater National Forest Public Information, Portland, OR. U.S. Department of Energy, Bonneville Power Administration, Division of Fish and Wildlife.

[22] Beamer, E. M. and R. G. LaRock. 1998. Fish use and water quality associated with a levee crossing the tidally influenced portion of Browns Slough, Skagit River Estuary, Washington. Skagit System Cooperative, LaConnor, WA.

[23] Simenstad, C. A. and R. M. Thom. 1992. Restoring Wetland Habitats in Urbanized Pacific Northwest Estuaries. Pp. 423-472 In G. W. Thayer, editor, Restoring the Nation's Marine Environment. Maryland Sea Grant, College Park, MD.

[24] Zedler, J. B. 1984 Salt Marsh restoration: A guidebook for southern California. La Jolla, CA. Department of Biology, San Diego State University (California Sea Grant Project Report No. T-CSGCP-009).

[25] Kusler, J. A. and M. E. Kentula. 1989. Wetland creation and restoration: the status of the science. Corvallis, OR. U.S. Environmental Protection Agency, Environmental Research Laboratory.

Additional Resources

Bates, K. 1992. Fishway Design Guidelines for Pacific Salmon. Washington Department of Fish and Wildlife.

Bell, M. 1991. Fisheries Handbook of Engineering Requirements and Biological Criteria. out of print.

Carling, P. A. 1983. Threshold of Coarse Sediment Transport in Broad and Narrow Natural Steams. Earth Surface Processed and Landforms 8:1-18.

Chin, A. 1999. The morphologic structure of step-pools in mountain streams. Elsevier Science B.V. Geomorphology, 27:191.

Frenkel, R. E. and J. C. Morlan. 1991. Can We Restore Our Salt Marshes? Lessons from the Salmon River, Oregon. The Northwest Environmental Journal, 7:119-135, University of Washington, Seattle, WA.

Hubbard, L. C. 1997. Flow Processes in Mountain Rivers. Doctoral thesis. University of London. p. 389 plus appendix.

Jordon, M. C. and R. F. Carlson. 1987. Design of Depressed Invert Culverts. Water Research Center, Institute of Northern Engineering, University of Alaska - Fairbanks. State of Alaska, Department of Transportation and Public Facilities, Research Section, Fairbanks, AK. p. 64.

Montgomery, D. R., and J. M. Buffington. 1993. Channel classification, prediction of channel response, and assessment of channel condition. Washington State Department of Natural Resources Report TFW-SH10-93-002.

Montgomery, D. R. and J. M. Buffington. 1997. Channel-reach morphology in mountain drainage basins. GSA Bulletin, 109:5:596-611.

Rajaratnam, N., C. Katopodis and N. McQuitty. 1989. Hydraulics of culvert fishways II: culvert fishways with slotted-weir baffles. CSCE Journal. 16:375-383.

Rajaratnam, N. and C. Katopodis. 1990. Hydraulics of Culvert Fishways III: Weir Baffle Culvert Fishways. Canadian Journal Civil Engineering. 16:5:774-777.

Sayre, W. W. and M. L. Albertson. 1963. Roughness Spacing in Rigid Open Channels. ASCE Transactions. Vol. 128, Part I.

Shoemaker, R. H. 1956. Hydraulics of Box Culverts with Fish-Ladder Baffles. Proceedings of the 35th Annual Meeting, Highway Research Board. NAS-NRC Publication 426.

U.S. Army Corps of Engineers. 1994. Hydraulic Design of Flood Control Channels, June 30, 1994. EM 1110-2-1601.

Appendix A – Glossary

aggradation: The geologic process by which a streambed is raised in elevation by the deposition of additional material transported from upstream (Opposite of degradation).

armor: A surface streambed layer of course grained sediments that are rarely transported. This layer protects the underlying sediments from erosion and transport, while creating enough roughness to prevent channel down-cutting.

backwater: Stream water, obstructed by some downstream hydraulic control, is slowed or stopped from flowing at its normal, open-channel flow condition.

baffle: Pieces of wood, concrete or metal that are mounted in a series on the floor and/or wall of a culvert to increase boundary roughness, thereby reducing the average water velocity and increasing water depth within the culvert.

bed: The land below the ordinary high water lines of the waters of the state of Washington. This definition does not include irrigation ditches, canals, storm water run-off devices or artificial watercourses, except where they exist in a natural watercourse that has been altered by man.

bedload: The part of sediment transport that is not in suspension, consisting of coarse material moving on or near the channel bed surface.

bed roughness: The unevenness of streambed material (i.e. gravel, cobbles) that contributes resistance to stream flow. The degree of roughness is commonly expressed using Manning's roughness coefficient (see Equation 2 in Chapter 5, *Hydraulic Design Option*).

cascade: A series of small, vertical drops within a channel. They can be natural or man-made.

channel-bed width: For the purpose of culvert design, the channel-bed width is defined as the width of the bankfull channel. The bankfull channel is defined as the stage when water just begins to overflow into the active floodplain. Determining bankfull width requires the presence of a floodplain or a bench; however, many channels have neither. In those cases, bankfull channel must be determined using features that do not depend on a floodplain, such as those used in the description of active channel and ordinary high water (see Chapter 4, *No-Slope Design Option* and Appendix F, *Summary Forms for Fish-Passage Design Data* for more information). Refer to Appendix H, *Measuring Channel-Bed Width* for details and information on how to measure channel-bed width.

clast: A fragment of rock.

debris: Material distributed along and within a channel or its floodplain either by natural processes or human influences. Includes gravel, cobble, rubble and boulder-sized sediments, as well as trees and other organic accumulation scattered about by either natural processes or human influences.

degradation: The removal of streambed materials caused by the erosional force of water flow that results in a lowering of the bed elevation throughout a reach (Opposite of *aggradation*.)

deposition: The settlement of material onto the channel-bed surface or floodplain.

dewater: To remove water from an area.

fishway: A system specifically designed for passage of fish over, around or through an obstruction. Such systems include hydraulic-control devices, special attraction devices, entrances, collection and transportation channels, fish ladders, exits, and operation and maintenance standards.

fork length: The length of a fish measured from the most anterior part of the head to the deepest point of the notch in the tail fin.

freshet: A rapid, temporary rise in stream flow caused by snow melt or rain.

geomorphology: The study of physical features associated with landscapes and their evolution. Includes factors such as; stream gradient, elevation, parent material, stream size, valley bottom width and others.

grade stabilization or grade control: Stabilization of the streambed surface elevation to protect against degradation. Grade stabilization usually consists of a natural or man-made hard point in the channel that holds a set elevation.

gradient: The slope of a stream-channel bed or water surface, expressed as a percentage of the drop in elevation divided by the distance in which the drop is measured.

headcut: The erosion of the channel bed, progressing in an upstream direction, creating an incised channel. Generally recognized as small, vertical drops or waterfalls, or abnormally over-steepened channel segments.

incised channel: A stream channel that has deepened and narrowed, becoming disconnected from its floodplain.

incision: The resulting change in channel cross section from the process of degradation.

mitigation: Actions taken to avoid or compensate for the impacts to habitat resulting from man's activities (WAC 220-110-050).

OHW Mark: Ordinary high water mark.

ordinary high water mark: Generally, the lowest limit of perennial vegetation. There are also legal definitions of ordinary high water mark that include characteristics of erosion and sediment.

The ordinary high water mark can usually be identified by physical scarring along the bank or shore, or by other distinctive signs. This scarring is the mark along the bank where the action of water is so common as to leave a natural line impressed on the bank. That line may be indicated by erosion, shelving, change in soil characteristics, destruction of terrestrial vegetation, the presence of litter or debris or other distinctive physical characteristics.

The legal definition of ordinary high water mark per WAC 220-110-020(31) is:

> *"Ordinary high water line means the mark on the shores of all waters that will be found by examining the bed and banks and ascertaining where the presence and action of waters are so common and usual and so long continued in ordinary years, as to mark upon the soil or vegetation a character distinct from that of the abutting upland: Provided, That in any area where the ordinary high water line cannot be found the ordinary high water line adjoining saltwater shall be the line of mean higher high water and the ordinary high water line adjoining freshwater shall be the elevation of the mean annual flood."*

Considerable judgment is required to identify representative ordinary high water marks. It may be difficult to identify the mark on cut banks. In warm months grasses or hanging vegetation may obscure the mark. Artificial structures (culverts, bridges or other constrictions) can affect the mark In their vicinity by creating marks on the shore that are consistent with ordinary high water marks, but they are above the elevation that is usually found in undisturbed river reaches.

Where the ordinary high water mark cannot be determined reliably, the surveyor should move to a location where the channel section will allow for a more precise measurement. At a location beyond the influence of artificial structures, measure the indicators in at least five different places (spaced about five channel widths apart in straight channel sections), and take the average of these distances.

perching: The tendency to develop a falls or cascade at the outfall of a culvert due to erosion of the stream channel downstream of the drainage structure.

reach: A section of a stream having similar physical and biological characteristics.

regrade: The channel's process of stabilization usually caused by new or extreme conditions. See headcut and degradation.

riffle: A reach of stream in which the water flow is rapid and usually more shallow that the reaches above and below. Natural streams often consist of a succession of pools and riffles.

riparian area: The area adjacent to flowing water (e.g., rivers, perennial or intermittent streams, seeps, or springs) that contains elements of both aquatic and terrestrial ecosystems, which mutually influence each other.

riprap: Large, durable materials (usually fractured rocks; sometimes broken concrete, etc.) used to protect a stream bank or lake shore from erosion; also refers to the materials used for this purpose.

rise: The maximum, vertical, open dimension of a culvert; equal to the diameter in a round culvert and the height in a rectangular culvert.

scour: The process of removing material from the bed or banks of a channel through the erosive action of flowing water.

shear strength: The characteristic of soil, rock and root structure that resists the sliding of one material against another.

shear stress: A measure of the erosive force acting on and parallel to the flow of water. It is expressed as force per unit area (lb/ft^2). In a channel, shear stress is created by water flowing parallel to the boundaries of the channel; bank shear is a combined function of the flow magnitude and duration, as well as the shape of the bend and channel cross section.

slope: Vertical change with respect to horizontal distance within the channel (*see gradient*). Refer to Appendix H for information on how to measure slope.

slope ratio: The ratio of the proposed culvert bed slope to the upstream water-surface slope.

substrate: Mineral and organic material that forms the bed of a stream.

tailout: The downstream end of a pool where the bed surface gradually rises and the water depth increases. It may vary in length, but usually occurs immediately upstream of a riffle.

thalweg: The longitudinal line of deepest water within a stream.

toe: The base area of a streambank, usually consisting of the bottom margin of vegetated bank and that portion of bank that is submerged during low flow.

weir: A small dam that causes water to back up behind it, with plunging flow over it. Weirs are often notched to concentrate low-flow water conditions.

WRIA: Water Resource Inventory Area.

Water Resource Inventory Area:
Areas or boundaries created around major watersheds within the State of Washington for administration and planning purposes. These boundaries were jointly agreed upon in 1970 by Washington's natural resource agencies (departments of Ecology, Natural Resources and Fish and Wildlife). They were formalized under WAC 173-500-040 and authorized under the Water Resources Act of 1971, RCW 90.54.

waters of the state or **state waters:**
Includes lakes, rivers, ponds, streams, inland waters, underground water, salt waters, estuaries, tidal flats, beaches and lands adjoining the sea coast of the state, sewers, and all other surface waters and watercourses within the jurisdiction of the state of Washington.

width ratio: The ratio of the proposed culvert-bed width to the upstream channel bankfull width.

Appendix B – Washington Culvert Regulation

WAC 220-110-070 Water Crossing Structures

In fish bearing waters, bridges are preferred as water crossing structures by the department in order to ensure free and unimpeded fish passage for adult and juvenile fishes and preserve spawning and rearing habitat. Pier placement waterward of the ordinary high water line shall be avoided, where practicable. Other structures which may be approved, in descending order of preference, include: Temporary culverts, bottomless arch culverts, arch culverts and round culverts. Corrugated metal culverts are generally preferred over smooth surfaced culverts. Culvert baffles and downstream control weirs are discouraged except to correct fish passage problems at existing structures.

An HPA is required for construction or structural work associated with any bridge structure waterward of or across the ordinary high water line of state waters. An HPA is also required for bridge painting and other maintenance where there is potential for wastage of paint, sandblasting material, sediments, or bridge parts into the water, or where the work, including equipment operation, occurs waterward of the ordinary high water line. Exemptions/5-year permits will be considered if an applicant submits a plan to adhere to practices that meet or exceed the provisions otherwise required by the department.

Water crossing structure projects shall incorporate mitigation measures as necessary to achieve no-net-loss of productive capacity of fish and shellfish habitat. The following technical provisions shall apply to water crossing structures:

NOTE: WAC 22-110-070 ***Item (1),*** *which addresses bridges, is not included in this printing of Design of Road Culverts for Fish Passage because this guideline does not discuss bridge crossings.*

(2) Temporary culvert installation.

The allowable placement of temporary culverts and time limitations shall be determined by the department, based on the specific fish resources of concern at the proposed location of the culvert.

(a) Where fish passage is a concern, temporary culverts shall be installed according to an approved design to provide adequate fish passage. In these cases, the temporary culvert installation shall meet the fish passage design criteria in Table 1 in subsection (3) of this section.

(b) Where culverts are left in place during the period of September 30 to June 15, the culvert shall be designed to maintain structural integrity to the 100-year peak flow with consideration of the debris loading likely to be encountered.

(c) Where culverts are left in place during the period June 16 to September 30, the culvert shall be designed to maintain structural integrity at a peak flow expected to occur once in 100 years during the season of installation.

(d) Disturbance of the bed and banks shall be limited to that necessary to place the culvert and any required channel modification associated with it. Affected bed and bank areas outside the culvert shall be restored to preproject condition following installation of the culvert.

(e) The culvert shall be installed in the dry, or in isolation from stream flow by the installation of a bypass flume or culvert, or by pumping the stream flow around the work area. Exception may be granted if siltation or turbidity is reduced by installing the culvert in the flowing stream. The bypass reach shall be limited to the minimum distance necessary to complete the project. Fish stranded in the bypass reach shall be safely removed to the flowing stream.

(f) Wastewater, from project activities and dewatering, shall be routed to an area outside the ordinary high water line to allow removal of fine sediment and other contaminants prior to being discharged to state waters.

(g) Imported fill which will remain in the stream after culvert removal shall consist of clean rounded gravel ranging in size from one-quarter to three inches in diameter. The use of angular rock may be approved from June 16 to September 30, where rounded rock is unavailable. Angular rock shall be removed from the watercourse and the site restored to preproject conditions upon removal of the temporary culvert.

(h) The culvert and fill shall be removed, and the disturbed bed and bank areas shall be reshaped to preproject configuration. All disturbed areas shall be protected from erosion, within seven days of completion of the project, using vegetation or other means. The banks shall be revegetated within one year with native or other approved woody species. Vegetative cuttings shall be planted at a maximum interval of three feet (on center), and maintained as necessary for three years to ensure eighty percent survival. Where proposed, planting densities and maintenance requirements for rooted stock will be determined on a site-specific basis. The requirement to plant woody vegetation may be waived for areas where the potential for natural revegetation is adequate, or where other engineering or safety factors need to be considered.

(i) The temporary culvert shall be removed and the approaches shall be blocked to vehicular traffic prior to the expiration of the HPA.

(j) Temporary culverts may not be left in place for more than two years from the date of issuance of the HPA.

(3) Permanent culvert installation.

(a) In fish bearing waters or waters upstream of a fish passage barrier (which can reasonably be expected to be corrected, and if corrected, fish presence would be reestablished), culverts shall be designed and installed so as not to impede fish passage. Culverts shall only be approved for installation in spawning areas where full replacement of impacted habitat is provided by the applicant.

(b) To facilitate fish passage, culverts shall be designed to the following standards:

(i) Culverts may be approved for placement in small streams if placed on a flat gradient with the bottom of the culvert placed below the level of the streambed a minimum of twenty percent of the culvert diameter for round culverts, or twenty percent of the vertical rise for elliptical culverts (this depth consideration does not apply within bottomless culverts). Footings of bottomless culverts shall be buried sufficiently deep so they will not become exposed by scour with in the culvert. The twenty percent placement below the streambed shall be measured at the culvert outlet. The culvert width at the bed, or footing width, shall be equal to or greater than the average width of the bed of the stream.

(ii) Where culvert placement is not feasible as described in (b)(i) of this subsection, the culvert design shall include the elements in (b)(ii)(A) through (E) of this subsection:

(A) Water depth at any location within culverts as installed and without a natural bed shall not be less than that identified in **Table 1**. The low flow design, to be used to determine the minimum depth of flow in the culvert, is the two-year seven-day low flow discharge for the subject basin or ninety-five percent exceedance flow for migration months of the fish species of concern. Where flow information is unavailable for the drainage in which the project will be conducted, calibrated flows from comparable gauged drainages may be used, or the depth may be determined using the installed no-flow condition.

(B) The high flow design discharge, used to determine maximum velocity in the culvert (**see Table 1**), is the flow that is not exceeded more than ten percent of the time during the months of adult fish migration. The two-year peak flood flow may be used where stream flow data are unavailable.

(C) The hydraulic drop is the abrupt drop in water surface measured at any point within or at the outlet of a culvert. The maximum hydraulic drop criteria must be satisfied at all flows between the low and high flow design criteria.

(D) The bottom of the culvert shall be placed below the natural channel grade a minimum of twenty percent of the culvert diameter for round culverts, or twenty percent of the vertical rise for elliptical culverts (this depth consideration does not apply within bottomless culverts). The downstream bed elevation, used for hydraulic calculations and culvert placement in relation to bed elevation, shall be taken at a point downstream at least four times the average width of the stream (this point need not exceed twenty-five feet from the downstream end of the culvert). The culvert capacity for flood design flow shall be determined by using the remaining capacity of the culvert.

Table 1. *Fish Passage Design Criteria for Culvert Installations*

	Adult Trout >6 in. (150 mm)	**Adult Pink, Chum Salmon**	**Adult Chinook, Coho, Sockeye, Steelhead**
Culvert Length	**Maximum velocity (fps)**		
10 - 60 feet	4.0	5.0	6.0
60 - 100 feet	4.0	4.0	5.0
100 - 200 feet	3.0	3.0	4.0
Greater than 200 feet	2.0	2.0	3.0
	Minimum water depth (ft)		
	0.8	0.8	1.0
	Maximum hydraulic drop in fishway (ft)		
	0.8	0.8	1.0

(E) Appropriate statistical or hydraulic methods must be applied for the determination of flows in (b)(ii)(A) and (B) of this subsection. These design flow criteria may be modified for specific proposals as necessary to address unusual fish passage requirements, where other approved methods of empirical analysis are provided, or where the fish passage provisions of other special facilities are approved by the department.

(F) Culvert design shall include consideration of flood capacity for current conditions and future changes likely to be encountered within the stream channel, and debris and bedload passage.

(c) Culverts shall be installed according to an approved design to maintain structural integrity to the 100-year peak flow with consideration of the debris loading likely to be encountered. Exception may be granted if the applicant provides justification for a different level or a design that routes that flow past the culvert without jeopardizing the culvert or associated fill.

(d) Disturbance of the bed and banks shall be limited to that necessary to place the culvert and any required channel modification associated with it. Affected bed and bank areas outside the culvert and associated fill shall be restored to preproject configuration following installation of the culvert, and the banks shall be revegetated within one year with native or other approved woody species. Vegetative cuttings shall be planted at a maximum interval of three feet (on center), and maintained as necessary for three years to ensure eighty percent survival. Where proposed, planting densities and maintenance requirements for rooted stock will be determined on a site-specific basis. The requirement to plant woody vegetation may be waived for areas where the potential for natural revegetation is adequate, or where other engineering or safety factors preclude them.

(e) Fill associated with the culvert installation shall be protected from erosion to the 100-year peak flow.

(f) Culverts shall be designed and installed to avoid inlet scouring and shall be designed in a manner to prevent erosion of streambanks downstream of the project.

(g) Where fish passage criteria are required, the culvert facility shall be maintained by the owner(s), such that fish passage design criteria in Table 1 are not exceeded. If the structure becomes a hindrance to fish passage, the owner shall be responsible for obtaining a HPA and providing prompt repair.

(h) The culvert shall be installed in the dry or in isolation from the stream flow by the installation of a bypass flume or culvert, or by pumping the stream flow around the work area. Exception may be granted if siltation or turbidity is reduced by installing the culvert in the flowing stream. The bypass reach shall be limited to the minimum distance necessary to complete the project. Fish stranded in the bypass reach shall be safely removed to the flowing stream.

(i) Wastewater, from project activities and dewatering, shall be routed to an area outside the ordinary high water line to allow removal of fine sediment and other contaminants prior to being discharged to state waters.

Statutory Authority: RCW 75.08.080. 94-23-058 (Order 94-160), 220-110-070, filed 11/14/94, effective 12/15/94. Statutory Authority: RCW 75.20.100 and 75.08.080. 83-09-019 (Order 83-25), 220-110-070, filed 4/13/83.

Appendix C – Design Flows for Ungauged Streams

Fish-Passage Design Flows for Ungauged Catchments in Washington

Patrick D. Powers, P.E.
Caleb S. Saunders

Washington Department of FISH and WILDLIFE

Lands and Restoration Services Program
Environmental Engineering Services

December 23, 1996
Revised March 16, 1998
Revised, 2002

Prepared in Cooperation with the
Washington State Department of Transportation

Introduction

Successful upstream passage of adult and juvenile fish through artificial structures (e.g., channels, culverts, fishways) depends on the accurate determination of suitable passage design flows. This report provides guidance on estimating this flow by providing regional regression equations for ungauged catchments.

Certainly, successful fish passage through artificial structures cannot be provided at all flows, so a designated high design flow is serves as the upper limit of the range through which upstream fish-passage criteria are satisfied. Anything beyond that upper limit is considered to be a fish-passage barrier due to excessive velocity, drop height or turbulence. Debris and bed material also need to pass through artificial structures, so the accurate determination of suitable structural design flows are also important. WAC 220-110-070 requires that the high-flow design discharge be the flow that is not exceeded more than 10 percent of the time during the months of fish migration.

For gauged catchments, the 10-percent exceedance flow for any month can be determined easily by developing a flow-duration curve. For ungauged catchments, the two-year peak flood can be used to estimate this flow.[1] The two-year peak flow is often much higher (by 300 to 400 percent) than the 10-percent exceedance flow. K. D. Bates reviewed current Washington Department of Fish and Wildlife criteria and developed two regression equations relating basin parameters to the 10-percent exceedance flow.[2]

The U.S. Geological Survey has updated its regional regression equations for flood frequencies in Washington).[3] This report uses the same regions and basin parameters to develop regression equations for the 10-percent exceedance flow for the months of January and May. These months were selected to represent the high fish-passage design flow (Q_{FP}) for two periods when upstream passage has been observed.[4,5] January represents the month of highest flow, when adult salmonids are passing upstream, and May represents the most critical month for upstream passage of juvenile salmonids. Other months are also important, but January and May represent the two extreme combinations for design considerations. Equations were developed for three regions of western Washington (**Figure 1**). Data was also analyzed for eastern Washington, but no correlation between design flows and basin parameters could be found.

Description of Regions

The state of Washington was divided into subsections based on their drainage-flow characteristics. These regions were derived from a number of relevant sources and are the same as those regularly employed by the U.S. Water Resources Council and the U.S. Geological Survey.

The Coastal Lowland Region (Region 1) includes parts of Clallam, Jefferson, Mason, Thurston, Pacific, Lewis and all of Grays Harbor counties. Streams in Region 1 drain directly into the Pacific Ocean.

The Puget Sound Region (Region 2) includes sections of Clallam, Jefferson, Mason, Thurston and Pierce counties, and all of King, Snohomish, Whatcom and Skagit counties. Streams in Region 2 drain into the Puget Sound. In order to find the best correlation, the Region 2 data were divided into highland and lowland streams. The dividing line was defined at gauge elevations of 1000 feet. In addition, Region 2 had a high percentage of urbanized streams (defined arbitrarily as having greater than 20 percent impervious surfaces). Separate regression equations were run for this data.

The Lower Columbia Region (Region 3) includes all of Wahkiakum, Cowlitz and Clark counties, and sections of Skamania, Pacific and Lewis counties. In this region, rivers flow from westward and southward from the crest of the Cascade Mountains and drain into the Columbia River. Again the best correlation was found when the region was divided into highland and lowland subregions, based on gauge elevation.

The Eastern Washington Region (Region 4) includes streams and rivers found on all Washington lands from the crest of the Cascade Mountains eastward to the Idaho border. The U.S. Geological Survey and the U.S. Water Resources Council further divide eastern Washington into six subregions; however, for our purposes, it is more effective to consider eastern Washington as a whole. No correlation was found amongst the small, unrepresentative data pool gathered within this large, diverse region.

Figure 1. Regions in Washington State used for development of regression equations (Source: USGS 1996)

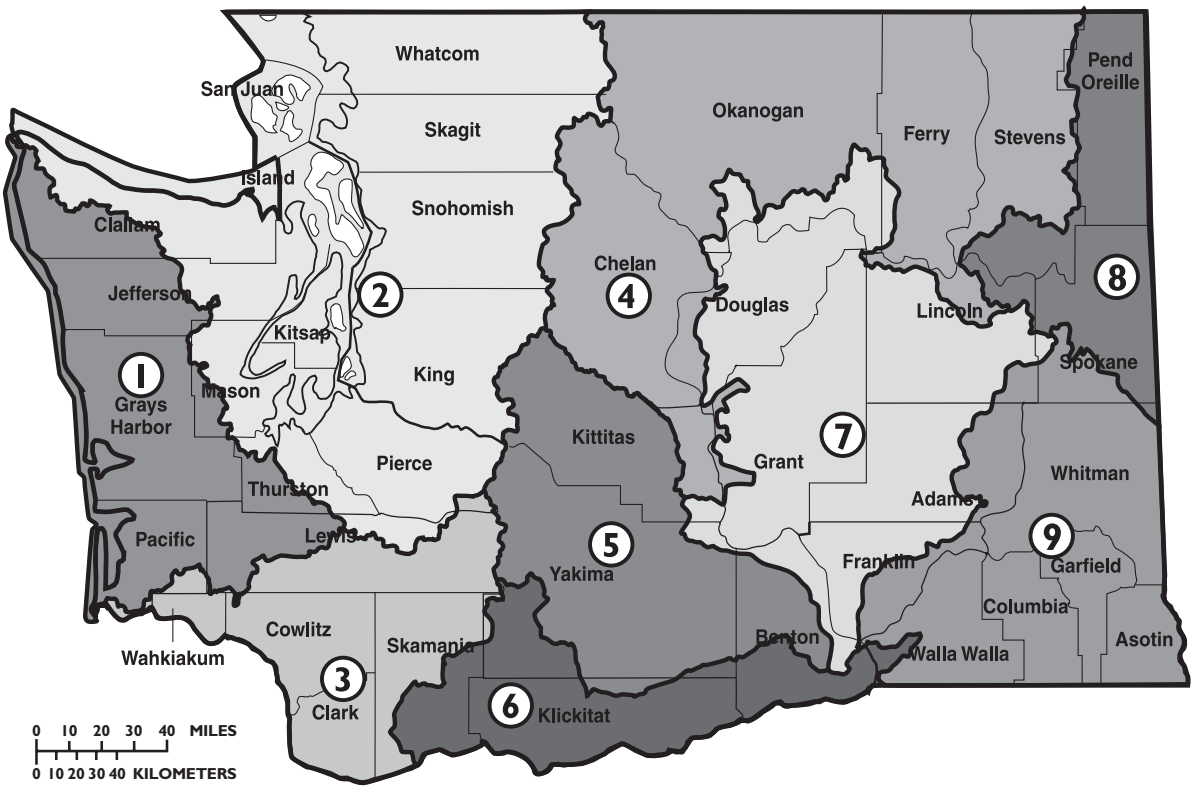

Methodology

To create a usable model for estimating fish-passage design flows, a data-selection process was necessary. The selected parameters required that the drainage areas under consideration be less than 50 square miles in width or length, with at least five years of January and May data compiled by the U.S. Geological Survey, and all selected data reported was required to be characterized as fair, good or excellent. Sites where the measured data were reported to be poor or had large periods of estimation during the months of interest were excluded from the analysis. Certain sites were also rejected because of major upstream diversions, lakes or reservoirs acting as stream controls. Data were compiled using US West Hydrodata® CD-ROM, 1997, for USGS Daily Values, as well as Open File Reports 84-144-A, 84-144-B, 84-145-A and 84-145-B. Most mean annual precipitation and precipitation intensity were gathered from the Open File Reports; however, when figures were not available in the Open File Reports, values were determined by locating the latitudinal and longitudinal coordinates of the gauge stations on Plates 1 and 2 (at the end of this article). The 10-percent exceedance flow values were calculated using the Hydrodata® software via the Weibul formula:

$$P = M/(N+1)$$

where *N* is the number of values and *M* is the ascendant number in the pool of values.

Regression Analysis

A least-squares, multiple-regression analysis was run on a logarithmic transformation of the data. Drainage area and mean annual precipitation (precipitation intensity for Region 1) were the independent values. The independent variables used were those specified in the 1996 U.S. Geological Survey report.

Reasonable correlations were found within the western Washington regions. Correlation improved upon further division of the individual regions. Gauges positioned lower than 1000 feet in elevation were classified as "lowland," while gauges positioned above 1000 feet were classified as "highland." Separate analyses were run for the high passage flows during the January and May migration periods for each region/subregion defined. Percent standard error[6] was derived from the formula:

$$SE_{percent} = 100(e^{mean\ squared} - 1)$$

where the units of the mean are natural log units. A table used for this formula allowed for simple derivation of standard error in percent from logarithmic units.[6]

It's important to remember the nonsymmetrical nature of the log-normal distribution. The higher the calculated design flow, the greater the probability that the upper design flow will fall higher than one standard error above the regression line and less than one standard error below the regression line. It is, however, correct to assume an equal probability within one standard error above or below the regression line when the calculated flow and the standard error are expressed in logarithmic (base 10) units. However, the imprecise nature of accurately predicting high-passage design flows would more often than not influence the user to add the standard error, making the probability distribution somewhat unimportant.

Results and Applications

Table 1 is a summary of the regression equations that were developed. Region 1 stations were all lowland (elevation <1000 ft); Region 2 had a mix of lowland and highland (elevation > 1000 ft) stations, as well as urbanized stations, and Region 3 had lowland and highland stations.

Computation of a fish-passage design flow at an ungauged site is made as follows:

1. From the map showing hydrologic regions (see **Figure 1** at the end of this article), select the region in which the site is located.

2. From Table 1 select the appropriate equation from the region, elevation or land-use condition and select the appropriate month.

3. Using a U.S. Geological Survey topographic map, measure the drainage area above the site; determine the latitude and longitude, and estimate the basin parameters from Plates 1 and 2 (at the end of this article).

4. Substitute the values determined from Step 3 into the equation from Step 2 and solve for the fish-passage design flow.

5. Apply the percent standard error as appropriate. In most cases, the standard error is added to the result because the high end of the passage flow is desired.

Example 1:
Lake Creek Tributary
(Lake Cavanaugh Road)

From Table 1:
Region 2, Elev <1000 ft, January
A = 1.82 sq mi
Latitude: 48°22' Longitude: 122°11'
From Plate 2: P = 80 in/yr

$$Q_{fp} = 0.125(A)^{.93}(P)^{1.15}$$

$$Q_{fp} = 0.125(1.82)^{.93}(80)^{1.15}$$

Q_{fp} = 34 cfs, Standard Error is 48.6%

Answer: Q_{fp} = 18 to 50 cfs .....

Example 2:
S. Branch Big Creek (SR 101)

From Table 1:
Region 1, May
A = 0.87 sq mi
Latitude: 47°09' Longitude: 123°53'
From Plate 1: $I_{24,2}$= 4.5 in/24 hours

$$Q_{fp} = 2.25(A)^{.85}(I_{24,2})^{0.95}$$

$$Q_{fp} = 2.25(0.87)^{.85}(4.5)^{0.95}$$

Q_{fp} = 8.3 cfs, Standard Error is 30.6%

Answer: Q_{fp} = 6 to 11cfs.....

Table 1. *Regional regression equations for fish-passage design flows in Washington. Q_{fp} = fish-passage design flow; A = drainage area, square miles; I = two-year, 24-hour precipitation, in inches; P = mean annual precipitation, in inches.*

	Equation	Constant a	Coefficients b	c	Standard error of prediction (%)
REGION 1					
January	$Q_{fp} = aA^bI^c$	6.99	0.95	1.01	25.7
May	$Q_{fp} = aA^bI^c$	2.25	0.85	0.95	30.6
REGION 2					
Lowland Streams < 1000 feet Elevation					
January	$Q_{fp} = aA^bP^c$	.125	0.93	1.15	48.6
May	$Q_{fp} = aA^bP^c$	.001	1.09	2.07	75
Highland Streams > 1000 feet Elevation					
January	$Q_{fp} = aA^b$	141	0.72		59.8
May	$Q_{fp} = aA^bP^c$	3.25	0.76	0.48	56.9
Urban Streams > 20% Effective Impervious Area					
January	$Q_{fp} = aA^bP^c$	.052	0.96	1.28	40.7
May	$Q_{fp} = aA^bP^c$	.003	1.10	1.60	43.3
REGION 3					
Lowland Streams < 1000 feet Elevation					
January	$Q_{fp} = aA^bP^c$	.666	0.95	0.82	38.1
May	$Q_{fp} = aA^bP^c$	.014	0.87	1.42	38.1
Highland Streams > 1000 feet Elevation					
January	$Q_{fp} = aA^bP^c$	.278	1.41	0.55	59.8
May	$Q_{fp} = aA^bP^c$	3.478	0.85	0.38	28.2

Table 2.. *Maximum and minimum values of basin characteristics and R^2 values used in the regression analysis by region and land type.*

	Drainage Area (sq mi)	Mean Annual Precipitation (inches)	Two-Year 24-hour Precipitation (inches)	R^2 (January/ May)
REGION 1				
Maximum	48	--	7.5	(0.91/0.84)
Minimum	2.72	--	2.5	
REGION 2				
Lowland Streams < 1000 ft Elevation				
Maximum	48.6	160	--	(0.81/0.77)
Minimum	1	28	--	
Highland Streams > 1000 ft Elevation				
Maximum	45.8	170	--	(0.68/0.76)
Minimum	.19	60	--	
Urban Streams > 20% Effective Impervious Area				
Maximum	24.6	47	--	(0.74/0.76)
Minimum	3.67	35	--	
REGION 3				
Lowland Streams < 1000 ft Elevation				
Maximum	40.8	130	--	(0.84/0.86)
Minimum	3.29	56	--	
Highland Streams > 1000 ft Elevation				
Maximum	37.4	132	--	(0.73/0.81)
Minimum	5.87	70	--	

Limitations and Comments

The equations presented in this study can be used within certain limitations to predict fish-passage design flows for western Washington. With the exception of urbanized streams in Region 2, the relationships were determined from gauging-station data for natural-flow streams and should not be applied where artificial conditions have altered stream hydrology. These equations are not a substitute for hydrologic synthesis within a region, where flows are actually measured to develop a correlation to gauged data. Extrapolations beyond the limits of the basic data used in each region are not advised. Relationships can be used with the most confidence in lowland areas, where runoff is dominated by rainfall, and with the least confidence in highland or desert areas with little rainfall. Many urbanized streams in Puget Sound have been modeled using continuous simulation models. Watershed basin plans may be available from local governments with data that should be used to generate flow-duration curves for a specific stream location.

Since no correlation was found for eastern Washington, it is recommended that the two-year peak-flood flow[7] be used there as the high fish-passage design flow.

Figure 2. Mean annual precipitation in Washington, 1930-57. (Source: U.S. Weather Bureau - 1965)

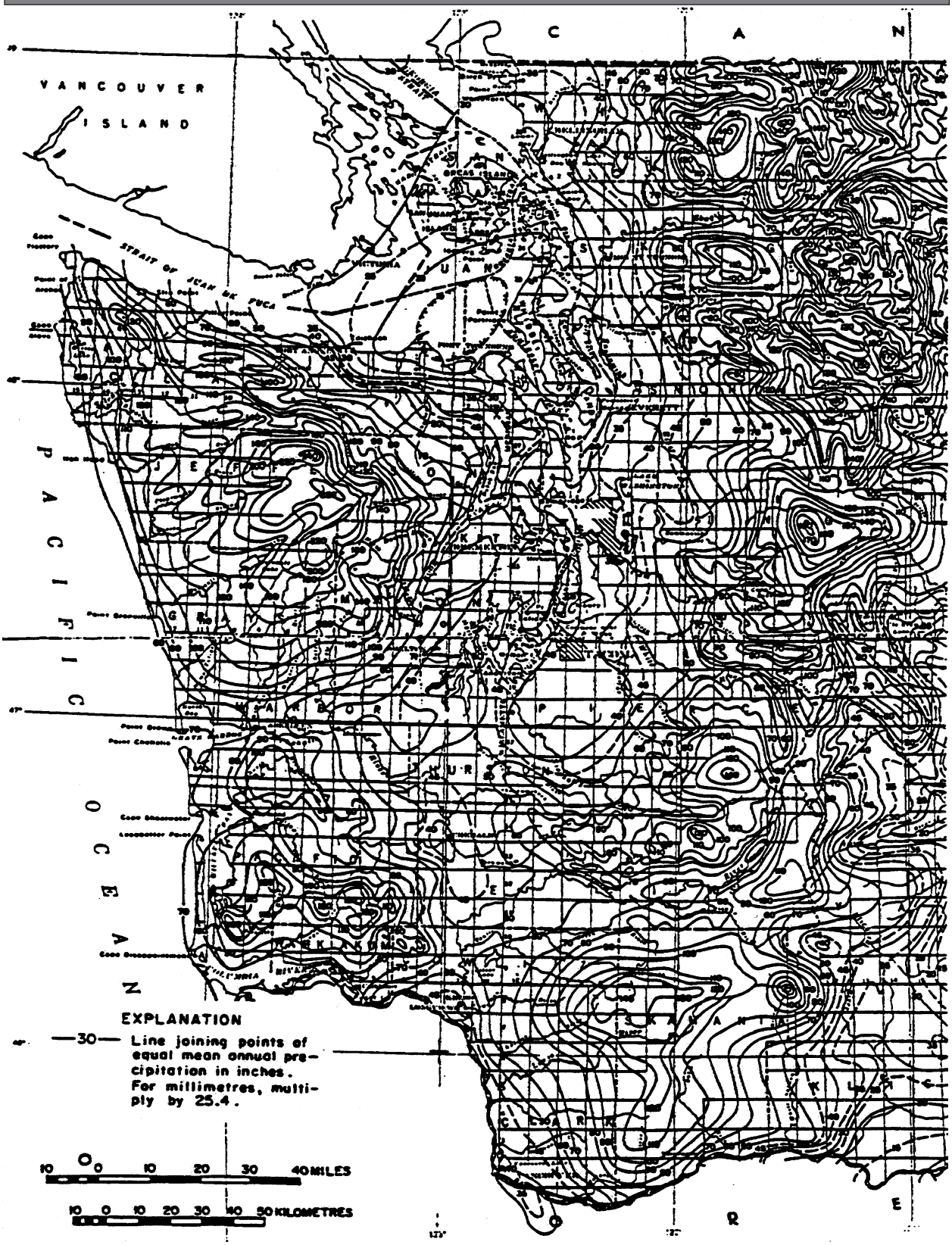

Figure 3. 2-year 24-hour Precipitation (Source: USDA-SCS-National Cartographic Center, Ft. Worth, TX)

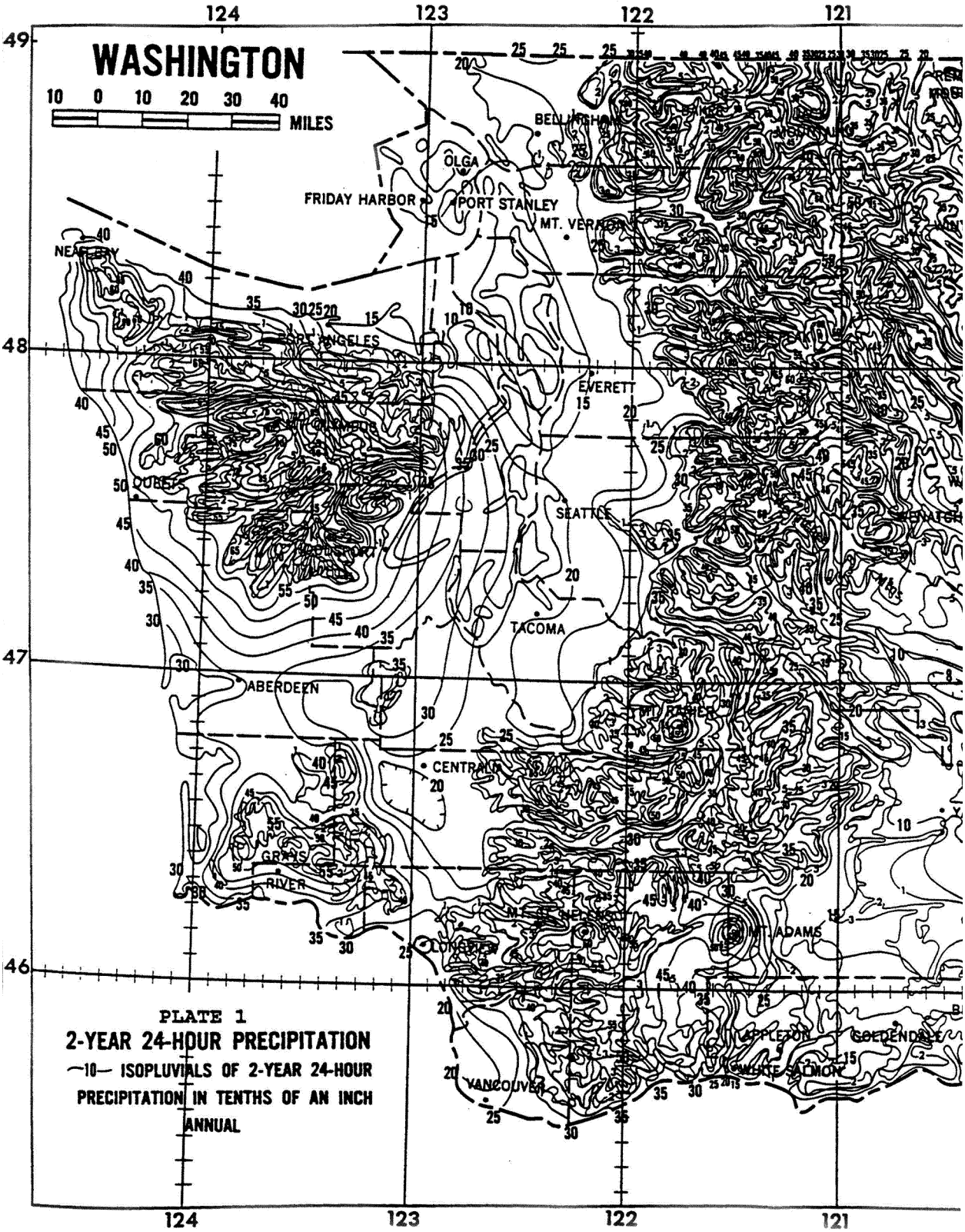

References

[1] Cummans, J. E., M. R. Collins and E. G. Nassar. 1975. Magnitude and frequency of floods in Washington. United States Geological Survey. Open-file report 74-336.

[2] Bates, K. and P. D. Powers. 1988. Design flows for adult salmon passage. Washington Department of Fisheries. Unpublished.

[3] S. S. Sumioka, D. L. Kresch and K. D. Kasnick. 1998. Magnitude and Frequency of Floods in Washington. U.S. Geological Survey, Water-Resources Investigations Report 97-4277.

[4] Cederholm, C. J., W. J. Scarlett. 1982. Seasonal immigration of juvenile coho salmonids into four small tributaries of the Clearwater River, Washington. University of Washington Press. Seattle, WA.

[5] Peterson, N. P. 1982. Immigration of juvenile coho salmon into riverine ponds. Canadian Journal of Fisheries Aquatic Sciences. 39:1308-1310.

[6] Tasker, G. D. 1978. Relation between Standard Errors in Log Units and Standard Errors in Percent. WRD Bulletin.

[7] U.S. Geological Survey. 1996. Flood frequencies in Washington. USGS. In preparation.

Additional Resources

Williams, J. R. and H. E. Pearson. 1985. Stream flow statistics and drainage basin characteristics for the South Western and Eastern Regions, Washington. Volume I. USGS. Open-file report 84-145-A. Volume II Open-file report 84-145-B.

Williams, J. R., H. E. Pearson and J. D. Wilson. 1985. Stream flow statistics and drainage basin characteristics for the Puget Sound Region, Washington. Volume I. USGS. Open-file report 84-144-A. Volume II. Open-file report 84-144-B.

Appendix D – Hydraulics of Baffles

Baffles are added to culverts as roughness elements to reduce the internal water velocity to a level acceptable for fish passage. Baffles must satisfy two hydraulic criteria at all levels of flow up to and including the fish-passage design flow:

1. the velocity created by baffles must comply with WAC 220-110-070 and with what is described in this guideline, and

2. the turbulence they generate must not be so much that it creates a barrier to fish passage.

There are three aspects of hydraulic analysis discussed here:

- velocity,
- turbulence analyses for fish passage, and
- culvert capacity with baffles.

Details of baffle installation are also discussed in this appendix.

Fish-Passage and Culvert-Capacity Hydraulic Analysis

The velocity of flow associated with culvert baffle systems can be derived from hydraulic laboratory work conducted by several groups. N. Rajaratnam and C. Katopodis[1,2] studied various combinations of baffle geometries, heights, spacings, slopes and flows in models of circular culverts. Hydraulic-model studies for weir baffles in box culverts were studied by R. Shoemaker.[3] These models can be used for both the fish-passage velocity and culvert-capacity analyses. Rajaratnam and Katopodis developed flow equations for all the styles they tested. Those equations are simplified here to the form of Equation 1.

$$Q = C(y_o/D)^a (gS_oD^5)^{1/2}$$

Equation 1

Where:

C	=	the coefficient that depends on the baffle configuration
D	=	the diameter of the culvert
a	=	the exponent that depends on the baffle configuration
Q	=	the discharge in cfs
y_o	=	the depth of water
g	=	the gravitational acceleration in ft/sec/sec
S_o	=	the nondimensional slope of the culvert
Z_o	=	the height of the baffle (as shown in **Figure D-1**)

The dimensions and their respective coefficients and exponents for Equation 1 are shown in **Table D-1**. The first column contains the labels of experimental baffles that were provided by the authors; data for those without labels have been extrapolated. The difference in styles are represented by the dimensions in the next two columns; Z_o is the average height of the baffle, *L* is the spacing between baffles and *D* is the diameter of the culvert. The limits shown in the table are the limits of experimental data or valid correlation for the coefficients and exponents.

***Table D-1**. Baffle hydraulics.*

	Z_o	L	C	a	Limits
WB-2	0.15D	0.6D	5.4	2.43	0.25 y0/D < 0.8
WB-1	0.15D	1.2D	6.6	2.62	0.35 y0/D < 0.8
	0.15D	2.4D	8.5	3.0	
WB-3	0.10D	0.6D	8.6	2.53	0.35 y0/D < 0.8
WB-4	0.10D	1.2D	9.0	2.36	0.20 y0/D < 0.8
	0.10D	2.4D	9.6	2.5	

Using **Equation 1**, calculate the depth of flow. The resulting velocity is the flow divided by the cross-section flow area between the baffles.

The weir baffles studied by Rajaratnam an Katopodis[1,2] were actually horizontal weirs, rather than sloping baffles as shown in **Figure D-1.** This is the most reliable information available for predicting the roughness of baffles recommended in this guideline and must be used with sound judgement. Box culverts were not included in this study. The models presented below for culvert capacity with baffles can be used for fish-passage analysis in box culverts.

Figure D-1. Common Baffle Styles

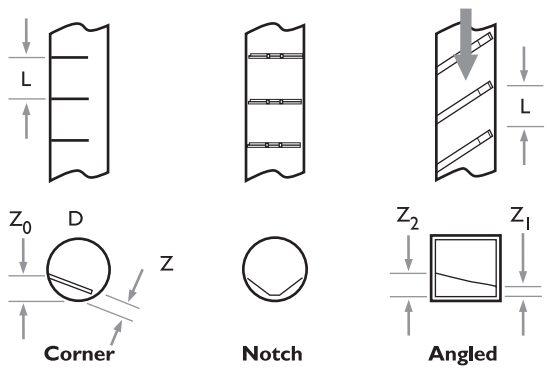

Recommended styles of baffles for round and box culverts.

Hydraulic model studies for weir baffles in square box culverts were studied by Shoemaker.[3] Internal-culvert friction loss and entrance losses were calculated from hydraulic model studies. Shoemaker used the Darcy-Weisbach friction equation (Equation 2) as a hypothetical model for culverts with baffles:

$$HW = (K_e + C_e + f\,L_c/D)V^2/2g + P - S_oL_c$$

Equation 2

Where:

- f = the friction coefficient
- L_c = the length of the culvert
- D = the diameter of pipe (four times the hydraulic radius of noncircular pipes)
- $V^2/2g$ = the gross section velocity head in the culvert where V is the average velocity in ft/sec
- P = the outlet water-surface elevation
- S_o = the slope of the culvert
- K_e = culvert entrance head-loss coefficient
- C_e = culvert exit head-loss coefficient

The baffles tested were full-width, level baffles with rounded leading edges at a radius equal to one tenth of the culvert height. Baffle heights of 0.10, 0.20 and 0.30 times the culvert height and spacings of 1.0, 2.0 and 4.0 times the culvert height were studied.

Shoemaker's variation of the Darcy-Weisbach friction factor is depicted in **Figure D-2**, where *Z* is the baffle depth and *L* is the baffle spacing.

Friction factors for short baffle spacings should be used cautiously. As would be expected, as the baffle spacing approaches zero, the baffle roughness actually decreases and the effective cross-sectional area of the culvert becomes the area of the culvert remaining above the baffles. Shoemaker, in his calculation of velocity head, used the gross culvert area.

Figure D-2. Variation of Darcy Weisbach friction factor with baffle spacing.

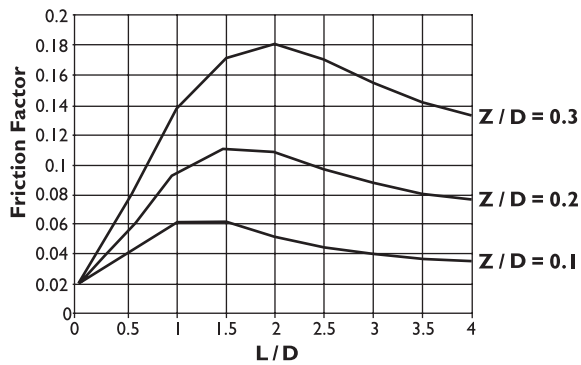

A second analysis by Shoemaker[3] is intended specifically for estimating culvert capacity. It provides a means for evaluating other energy components making up the hydraulic grade line through a culvert. Shoemaker made the assumption that entrance, outlet and friction losses are proportional to the velocity head. With these assumptions, the energy equation for flow through the culvert can be written using Equation 2, where *HW* is the headwater elevation above the invert at the culvert entrance. Other parameters are as previously defined. Shoemaker[3] describes a reasonable approximation of *P* as the distance from the culvert invert to the center of the flow in the opening above a baffle.

Figure D-3. Energy coefficients for various baffle arrangements

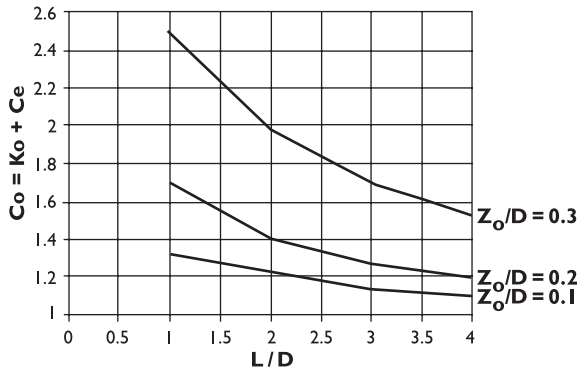

Shoemaker[3] derived the combined values of the head loss coefficients K_e and C_e as a single coefficient, C_o, which is shown in **Figure D-3** as a function of baffle spacing and height. In Shoemaker's model, the culvert entrance and exit had aprons extending 2.5 times the culvert width, with wing walls flaring at 34 degrees from the culvert line, mitered at a 2:1 slope. The baffle that was furthest upstream was consistently placed one culvert height downstream from the culvert entrance and the downstream-most baffle was placed at the edge of the apron.

Energy-Dissipation Factor

In order to maintain a desired velocity in a stream whose flow is too rapid, energy must be dissipated. Energy of falling water is dissipated by turbulence. Turbulence in the culvert is defined by the energy dissipation per unit volume of water and is referred to as the energy-dissipation factor (EDF). There is little research data available to determine the appropriate maximum EDF for fish passage. Based on observations and recorded fish passage through a number of culverts at different flows, it is recommended that the EDF be kept below a threshold of five foot-pounds per cubic foot per second (ft-lb/ft^3/sec) for passage of adult salmon. An exception to this guidance is acceptable if data is available from other culverts of a similar design that have been demonstrated to be successful.

It is further recommended that the EDF be greater than three ft-lb/ft^3/sec at the high fish-passage design flow. Lower turbulence causes sediment deposition and/or debris accumulations that either make the baffles ineffective or create a direct fish-passage barrier.

The energy-dissipation factor is calculated by the following equation:

$$EDF = \gamma QS/A$$

Equation 3

Where:
- EDF = energy-dissipation factor in ft-lb/ft^3/sec
- γ = unit weight of water (62.4 lbs. Per pcf)
- Q = flow in cubic feet per second
- S = the dimensionless slope of the culvert (e.g., ft/ft)
- A = the cross-sectional flow area at the flow between baffles in square feet.

Baffle Installation

Though they are not considered a viable long-term solution for fish passage, baffles can be useful on a temporary basis or where a permanent fix is unaffordable. Baffles in concrete culverts can be made of wood timbers, steel plate or precast concrete. Wood baffles have lasted as much as nearly 20 years in high-gradient streams with heavy rates of cobble and boulder bed load. Bent steel plates work well with one leg bolted to the floor and pointing downstream. Example sketches of an anchor bolting are included in Appendix I, *Sample Design Sketches.*

Expansion-ring anchors work well in round pipes and can be installed without diverting flow from the work area. The rings are expanded out against the entire pipe circumference. A rod is rolled to the shape of the culvert interior and attached to an anchor plate. The rod and anchor plate are attached to the culvert by expanding the rod into the recess of a corrugation. This is done by tightening a nut on one end of the rod against a sleeve attached to the other end of the rod. Once the rod and anchor plate are secured, the baffle is bolted to the anchor plate. This system will also work in smooth culverts. A set of shear bolts must first be anchored to the culvert wall; the expansion ring is then installed against the upstream side of the shear bolts. An example sketch of an expansion ring anchor is included in Appendix I.

Bolt anchor systems for existing circular or arch culverts need further development. Anchor-bolt and J-bolt systems have worked as anchor systems, but they are difficult to install and, consequently, often fail.

Generally, 3/16-inch steel is adequate for baffles though 1/4-inch plate can be used as a conservative design for long baffle life, especially in areas with corrosive water or high bed-load movement. Gussets should be added to stiffen and strengthen baffles when the baffles are greater than nine inches deep.

References

[1] N. Rajaratnam and C. Katopodis. 1990. Hydraulics of culvert fishways III: weir baffle culvert fishways. Canadian Journal of Civil Engineering. Vol. 17: 4:558-568.

[2] N. Rajaratnam. 1989. Hydraulics of culvert fishways III: slotted-weir culvert fishways. Canadian Journal of Civil Engineering. 16:3:375-383.

[3] R. H. Shoemaker. 1956. Hydraulics of box culverts with fish-ladder baffles. Proceedings of the 35th Annual Meeting, Highway Research Board, Engineering Experiment Station, Oregon State College. Report No. 53.

Appendix E – Design of Roughened Channels

Roughened channels consist of a graded mix of rock and sediment in a culvert or an open channel that create enough roughness and diversity to facilitate fish passage. The roughness aspect controls the velocity of flow, water depth, and the diversity aspect provides migration paths and resting areas for a variety of fish species and sizes. The design process described here is complex and requires substantial knowledge of hydraulic modeling, as well as an understanding of the methods suggested.

Using the Stream-Simulation Design Option (see Chapter 6, *Stream-Simulation Design Option*) is a much more conservative design method and does not require the level of analysis necessary for roughened channels. Stream simulation is the preferred design method, since it addresses many of the habitat considerations mentioned in the beginning of this guideline, whereas simply designing roughened channels only considers adult salmonid-passage as the design criteria. Unlike stream simulation, the bed material in roughened channels are not intended to be mobile. Though the bed of a roughened channel may shift slightly as a stability adjustment, it is not meant to scour and wash away, except at an extreme structural design flow. In contrast, the Stream-Simulation Design Option accommodates channel shifts as they occur in the natural stream.

These same design principles can be used for the design of channels outside of culverts as well. When applied downstream of a fixed structure, such as a culvert, a roughened channel should be designed cautiously, since any degrading of the channel will result in exposing the culvert bottom or exceeding the velocity criteria. Roughened channels are acceptable upstream of culverts to control channel headcutting.

Installations of this technique inside of culverts have had mixed results with regard to fish passage and stability. Because of this, culverts designed as roughened channels are viewed as experimental at this time. Being experimental, several conditions should be applied to culverts designed using this process. A contingency plan and a commitment to upgrade the facility if it fails in function or structure should be provided. A study plan that includes specific experimental objectives that will further the development or acceptance of the concept should be developed. There should be a commitment to a monitoring plan, including a reporting regimen and a peer critique of findings. At the conclusion of the study, the facility would either be accepted as adequate by the Washington Department of Fish and Wildlife, or it would be considered an unresolved passage barrier.

Additional experience with and monitoring of experimental installations will need to be compiled over time before the technique is accepted as a standard method and specific design details are provided. In the meantime, details of current design principles are provided here. Changes in the recommendations given are likely to be made as new observations and data become available.

Generally, the application of roughened channels might occur in the following situations:

- replacement culvert installations;
- moderate to high culvert slopes;
- over-steepened channel sections;
- where target species are identified for passage;
- where there is limited work area, e.g., limited to right-of-way; or
- where special design expertise, hydrology and survey information is available.

Roughened channels are designed to use large-scale roughness elements to control velocity and depth within the culvert. Ideally, channels are roughened to the point where the potential energy available at the upstream end is dissipated in the form of turbulence through the pipe, and no excess kinetic energy of flow is present within the pipe or at the downstream end. It should be noted that these culverts will have greater flow per unit width than the adjacent upstream channel, resulting in higher bed stress, turbulence and velocity, which further results in a higher sediment-transport rate, thereby encouraging the natural stream to become scoured and non-alluvial. This situation is less likely where roughened channels are built without the confinement of culvert walls.

Roughened-Channel Design

The most important aspects to consider in the design of roughened channels are:

- bed stability,
- average velocity at flows up to the fish-passage design flow,
- turbulence, and
- bed porosity.

Maximum average velocity and turbulence are the basic criteria of the Hydraulic Design Option. The bed materials inside the culvert create resistance to flow. Their stability is fundamental to the permanence of that structure. The effect of turbulence on fish passage can be approximated by limiting the energy-dissipation factor (EDF). In order for low flows to remain on the surface of the culvert bed and not percolate through a course, permeable substrate, bed porosity must be minimized. (Each of these considerations are discussed in subsequent sections of this chapter.)

The following is an outline of a suggested procedure for designing roughened channels. These steps are iterative; several trials may have to be calculated to determine a final acceptable design. (Additional details of these steps are provided in subsequent sections.)

1. Assume a culvert span. Begin with a culvert bed width equal to the stream width. Habitat considerations should be included at this phase in the design process. In particular, debris and sediment transport and the passage of nontarget fish and wildlife should be considered, all of which benefit from increased structure width.

2. Size the bed material for stability on the basis of unit discharge for the 100-year event (Q_{100}), as outlined in Step 3.

3. Check to see that the largest bed-particle size, as determined by stability, is less than one quarter the culvert span. If not, increase the culvert width, which decreases the unit discharge and, in turn, the particle size.

4. Create a bed-material gradation to control porosity (see Chapter 6).

5. Calculate the average velocity and EDF at the fish-passage design flow on the basis of culvert width and the bed D_{84} from gradation in Step 4 above. If the velocity or EDF exceed the criteria, increase the culvert span.

6. Check the culvert capacity for extreme flood events. This step is not detailed here, but it is required, just as it is for any new culvert or retrofit culvert design that affects the culvert's capacity.

The width of the culvert bed should be at least the width of the natural stream channel as defined in this guideline. When the width of the bed in roughened channel culverts is less than the bed width of the stream, hydraulic conditions are more extreme and the channel inside the culvert is more likely to scour. As gradient and unit discharge increase, the best way to achieve stability and passability is to increase the culvert width.

Bed Stability

In order for the roughened channel to be reliable as a fish-passage facility, it is essential that the bed material remain in the channel more or less as placed. It is expected that the bed material will shift slightly but not move any appreciable distance or leave the culvert. Bed stability is essential because these channels are not alluvial. Since they are often steeper and more confined than the natural, upstream channel, recruitment of larger material cannot be expected. Any channel-bed elements lost will not be replaced, and the entire channel will degrade. The 100-year flood is suggested as a high structural-design flow.

Bed-stability considerations, rather than fish-passage velocities, usually dominate the design of the bed-material composition. It is, therefore, recommended that bed-stability analysis be performed before calculating the fish-passage velocity.

At this time, there are no procedures that can determine the specific size of bed material needed to meet the angle of slope and volume of discharge for steep, roughened channels. In the case of the stream-simulation design option we can use natural analogs or models of natural systems to reliably estimate bed-material size (see Chapter 6). Roughened channels, on the other hand, increase hydraulic forces due to constriction and increased slope. Unfortunately we do not have a factor to relate the two and must resort to other methods. Four general methods are reviewed here:

- the U.S. Army Corps of Engineers steep slope riprap design,
- the critical-shear-stress method,
- the U.S. Army Corps of Engineers flood-control-channel method, and
- empirical methods.

U.S. Army Corps of Engineers Riprap Design

U.S. Army Corps of Engineers reference, EM 1110-2-1601, Section e., steep slope riprap design, gives this equation (Equation 1) for cases where slopes range from two to 20 percent, and unit discharge is low.

$$D_{30} = \frac{1.95S^{0.555}(1.25q)^{2/3}}{g^{1/3}}$$

Equation 1

Where: D_{30} = the dimension of the intermediate axis of the 30th percentile particle
S = the bed slope
q = the unit discharge
g = acceleration due to gravity.

The recommended value of 1.25 as a safety factor may be increased. The study from which this equation was derived cautions against using it for rock sizes greater that 6 inches.[1] The equation predicts sizes reasonably in hypothetical situations above this, but it has not been tested in real applications.

The U.S. Army Corps of Engineers recommends angular rock with a uniform gradation (D_{85}/D_{15} = 2). This material is not preferred for use in a fish-passage structure (see the section on bed porosity, below). An approximate factor to scale D_{30} of a uniform riprap gradation for one that is appropriate for stream channels is 1.5, so that,

$$D_{84} = 1.5D_{30}$$

Equation 2

Where: D_{84} = the dimension of the intermediate axis of the 84th percentile particle.

Critical-Shear-Stress Method

Critical shear stress is a time-honored method to estimate the initial movement of particles. J. C. Bathurst[2] and D. S. Olsen, et. al.,[3] among others, have said that critical shear stress should not be applied to steep channel, although R. A. Mussetter,[4] and R. Wittler and S. Abt[5] and others have used it. The Federal Highway Administration, developed a channel-lining design method based on critical shear stress, with data from flume and field studies.[6] The data is largely from low-gradient situations, but the design charts show slopes up to 10 percent and particle sizes up to 1.9 feet, which places it in the range of designed roughened channels.

The condition of stability is defined as the point at which the critical shear stress, τ_c, equals the maximum shear stress, τ_{0max}, experienced by the channel.

The critical shear stress is the shear stress required to cause the movement of a particle of a given size and is equal to four times D_{50}, where D_{50} is the 50th percentile particle, in feet. This relationship implies a critical, dimensionless shear stress of about 0.039. Mussetter[4] and Wittler and Abt[5] used 0.047. J. M Buffington and D. R. Montgomery[7] discuss the range of τ_c. The maximum shear stress is 1.5 times γRS, where γ is the unit weight of water, R the hydraulic radius and S the slope.

U.S. Army Corps of Engineers Flood-Control-Channel Method

U.S. Army Corps of Engineers EM 1110-2-1601 hydraulic design of flood-control channels manual uses a modified shear-stress approach to riprap design. This method should not be applied to channels greater than two-percent gradient. S. T. Maynord[8] modified this method for steep slopes:

$$D_{30} = C' \, (q^{2/3}S^{0.432})/(g^{1/3}\, K1)$$

Equation 3

$$C' = 5.3(S_f C_v C_t C_s)^{0.785}\left(\frac{\gamma_w}{\gamma_s - \gamma_3}\right)$$

Equation 4

$$K1 = \cos\alpha\,(1-(\gamma_w/(\gamma_s-\gamma_w))\tan\alpha/\tan\phi)$$

Equation 5

Where: α = the angle of the channel bottom from horizontal
ϕ is the angle of repose of the riprap.

Other constants as described in the Corps manual. Note the similarity to Equation 1 above. This method should only be applied by those familiar with EM 1110-2-1601.

Empirical Methods

There are a number of velocity methods based on empirical studies: U.S. Bureau of Reclamation (USBR EM-25),[9] U.S. Geological Survey,[10] S. V. Isbash[11] and the American Society of Civil Engineers.[12] They have in common this basic equation (Equation 6), with some modifications, where a and K are constants derived from field studies.

$$D_{30} = V^a/(K(\gamma_s-\gamma))$$

Equation 6

These methods are questionable for the design of roughened channel beds. Theoretically, the problem is that stream slope is not explicitly a factor in the analysis, and the velocity distribution is quite different at high bed slopes than it is in the low-gradient channels for which these methods were developed. Gravitational forces increase with slope, decreasing stability of a given rock size. Roughness increases with slope,[13] which reduces velocity, and, in turn the recommended rock size.

Figure E-1 compares various predictions of bed-material size as a function of slope. The sediment size is D_{84} for all the methods (except the Federal Highway Administration method[6] and the Isbash method,[11] which are riprap sizing techniques giving D_{50} of a uniform riprap gradation). The other significant variable – discharge – is held constant at 10 cfs/ft. This is a typical, bed-forming flow intensity for high-gradient channels. With increasing unit discharge, Isbash predicts smaller particle sizes at higher slopes relative to the other methods, and the Federal Highway Administration predicts much larger sizes.

Figure E-1. Relative performance of various sediment stability equations (Unit discharge = 10cfs/ft)

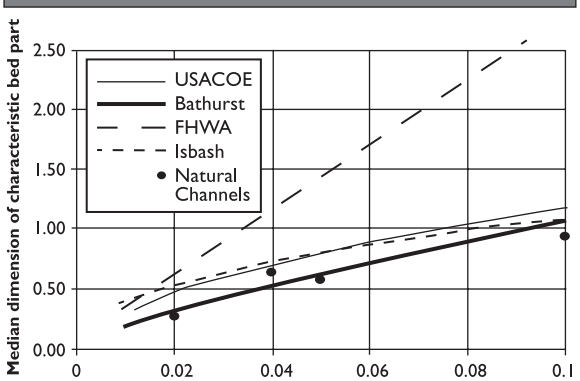

Various predictions of bed-material size as a function of slope.

Four natural streams are also shown in **Figure E-1** for reference. These streams' bed-changing discharge is estimated to be, on average, 9.4 cfs/ft. D_{84} from the actual bed-material distribution is shown here.

Shear stress is directly proportional to slope so the Federal Highway Administration method (critical shear stress) shows a linear relationship with slope. This is a trend not reflected in the other methods or the natural beds. Although, what is not accounted for in this simple analysis is that only a portion of the total boundary shear stress is responsible for sediment transport. Momentum losses due to hydraulic roughness other than bed friction account for the rest.[14] In addition, velocity profiles of steep, rough channels are not the same as hydraulically smooth, lower-gradient channels where shear-stress analysis was developed.[15] High-gradient channels have velocity profiles that are nonlogarithmic, unlike low-gradient channels.

The Isbash method is based solely on velocity, which is relatively insensitive to slope. Velocity, in this case, was developed from the J. T. Limerinos[16] roughness equation averaged with J. Costa's[17] power law for velocity, using the Bathurst[2] estimate of bed material size.

It is interesting to note that all the riprap-sizing techniques converge when slope is roughly one percent, which is the slope considered the upper limit of shear stress and velocity-based analysis.

Bathurst is consistent with natural streambed material that is expected to move at this flow intensity and is recommended for the design of stream simulation culverts. This should be the lower limit of particle sizes for designing roughened channels. The safety factor, which separates Bathurst from the actual design requirement, should be based on the various design factors.

As the width of the roughened channel culvert decreases relative to the width of the channel, flow intensity increases, and inlet contraction plays a role in stability. The bed-material design techniques account for increases in intensity, but they do not include inlet contraction as a factor. Small increases in head loss at the inlet can result in changes in velocity large enough to significantly change bed-material size estimates. Head loss of 0.1 foot represents an approximate 1.8 feet/sec velocity increase ($h = KV^2/2g$, $K = 0.5$) at the inlet, possibly forcing supercritical flow (see next paragraph). If Isbash is used, a 50-percent increase in rock size may be required. Equivalent flow intensity (the increase in unit discharge required to represent the head loss) increases dramatically as inlet losses occur.

The movement of bed material in natural, steep channels is thought to coincide with supercritical flow.[18] If, by decreasing the width of a culvert, the Froude number is caused to approach 1.0 at flows below those used to size the particles, then it is likely that the bed may fail prematurely. Unfortunately, most of the roughness-factor models were specifically developed for subcritical flow; it is, as a result, difficult to determine how flow velocity approaches supercritical flow. K. J. Tinkler[19] used an approach that calculates a specific Manning's *n* for the critical case, as a function of slope and depth. The Limerinos equation[16] (shown below in the section on velocity) follows this closely when it is determined that the bed roughness approximates a natural channel.

In cases where inlet contraction is minimal and flow inside the culvert is not expected to go supercritical prematurely, it is recommended that the U.S. Army Corps of Engineers' equation for steep channels be used to size bed material for roughened channels. This recommendation is made even though the equation was not considered applicable for particles over six inches in diameter. It still gives results in line with what we might expect to find in steep channels.

In addition to the methods mentioned here, theoretical work has been done by a number of researchers on the initial movement and general bedload discharge in steep, rough natural channels. Citations are shown in the references section at the end of this appendix.[1,2,18,21,22,23]

It is not recommended that culverts with bed material inside be designed to operate in a pressurized condition under any predicted flow. The riprap design methods suggested here assume open channel flow. They were not developed for high velocity and turbulence under pressure. Under most scenarios, it is assumed that minimum width requirements and fish-passage velocity criteria will be the limiting factors in design, not high flow capacity. But there may be cases where an unusual combination of events creates a situation where headwater depth exceeds the crown of the culvert. In such a case a conservative stability analysis would model the culvert using a complete culvert analysis program and/or a backwater model. The hydraulic results could then used to estimate shear stress conditions and determine a stable rock size.

Fish-Passage Velocity

The point of roughening the channel is to create an average cross-sectional velocity within the limits of the fish-passage criteria and the Hydraulic Design Option. The average velocity of a roughened channel culvert is essentially a function of

- stream flow,
- culvert bed width, and
- bed roughness.

The flow used to determine the fish-passage velocity is the fish-passage design flow as described in the section, Hydrology in Chapter 5, *Hydraulic Design Option*. As a design starting point, the width of the culvert bed should be at least the width of the natural stream-channel bed.

Steep and rough conditions present a unique challenge for hydraulic modeling. Traditional approaches to modeling open-channel flow assume normal flow over a bed having low relative roughness. In roughened channels, the height of the larger bed materials are comparable with the flow depth and complex turbulence dominates the flow.[21] A number of equations are available for an analysis of these conditions, but they are crude and generate widely varying results. Research to date has centered on estimating flow in natural, cobble/boulder streams and is not intended for use in engineering artificial channels.

Three researchers have used bed-material characterization and/or channel geometry to create empirical equations predicting roughness: Jarrett,[13] Limerinos[16] and Mussetter.[4] Generally, the conclusion one can draw from these studies is that friction factors in steep, rough channels are much larger than those found in lower-gradient streams. This conclusion is not surprising but it is notable just how high the roughness factors are. For instance, in Mussetter's field data on steep channels, 75 percent of the Manning's *n* values exceed 0.075, the highest *n* featured in H. H. Barnes' *Roughness Characteristics of Natural Channels*,[24] which covers larger, lower-gradient streams. It remains unclear as to how natural channels compare to constructed, roughened channels.

In general, the relationship between velocity and roughness is given by,

$$V/(gRS)^{1/2} = R^{1/6}/(ng)^{1/2} = (8/f)^{1/2}$$

Equation 7

Where:
- V = the average velocity
- g = the acceleration due to gravity
- R = the hydraulic radius
- *n* = Manning's roughness factor
- f = the Darcy-Weisbach friction factor.
- S = the friction slope of the channel

The use of *n* or *f* depends upon convention, but the Darcy-Weisbach equation accounts for the reduction in roughness with increasing depth, whereas Manning's equation does not.

Below is Limerinos' equation,[16]

$$n = \frac{0.0926R^{1/6}}{1.16 + 2\log(R/D_{84})}$$

Equation 8

Where: D_{84} = the dimension of the intermediate axis of the 84th percentile particle.

This equation is based on data where $0.9<R/D_{84}<69$ and $0.02<n<0.107$. The error range for $n/R^{1/6}$ is +42.9 percent to -33.7 percent. Limerinos' equation seems to produce a more accurate prediction in higher-velocity situations. It is likely to give smaller roughness values in lower-flow situations than Mussetter's equation, derived from data collected in California rivers.

Below is Jarrette's equation,[13]

$$n = .039S_f^{0.38}R^{-0.16}$$

Equation 9

Where: S_f = the friction slope of the channel.

This is based on data where the slope is between 0.002 and 0.04, although predictions may extend to 0.08[25] and where $0.4<R/D84<11$ and $0.03<n<0.142$. Jarrette's equation does not include sediment size as a variable. It is implied that, as slope increases, sediment size increases and so does roughness. Because sediment size is not included, the error range of *n* on the test data is wide, +44 percent to +123 percent. In constructed channels, there is no such relationship between slope and particles size. Jarrette is included here as a design aid for fish-passage flow where average velocity is less than three fps.

Below is Mussetter's equation,[4]

$$(8/f)^{1/2} = 1.11(d_m/D_{84})^{0.46}\,(D_{84}/D_{50})^{-0.85}\,S_f^{-0.39}$$

Equation 10

Where: d_m is the mean depth.

It is derived from data where $0.0054<S<0.168$, $0.25<R/D84<3.72$, $0.001<f<7.06$ ($0.036<n<4.2$). Since a relatively large amount of information is included in this equation, the error range on the test data is small, +3.8 percent to +12 percent. The equation is derived from data collected in Colorado mountain streams. Sediment distributions in these streams were very similar to those found in Washington, and they were similar to the distributions recommended in this guideline. Accuracy decreases where velocity is greater than about three fps; use only for fish-passage velocity.

These equations include all the roughness characteristics of natural channels, not just boundary roughness due to grain resistance. This means that, as the design channel differs from the diversity of natural channels, roughness estimates must be decreased. For instance, culvert walls offer little real resistance since they are very smooth and straight.

The design and construction of roughened channels must be done in such a way that roughness is maximized and natural channel planform and profile are emulated. Otherwise resistance equations based on natural channels will under predict the true velocity, and fish passage may not be successful.

A convincing argument states that channels, left to their own devices, form boundaries that create maximum resistance to flow .[26,27,28] There is an implied relationship between the measured resistance to flow and the natural tendency to maximize resistance. In artificial channels, we may or may not create maximum roughness during the design and construction process. This leaves our velocity estimates subject to considerable doubt when they are based on roughness values tied to natural conditions.

A riprap surface pounded into place without any steps and pools is hydraulically very smooth and certainly nothing like a natural channel. Yet, based on a characteristic particle size of the riprap material used, say D_{84}, flow velocity estimates using Mussetter's resistance equation would be only a fraction of those that would occur in this channel.

The Washington Department of Fish and Wildlife is currently working on a spreadsheet that summarizes some of the hydraulic and sediment-stability models mentioned in this appendix and in Chapter 6. Contact the department's Environmental Engineering Services for the latest information.

It is important to obtain a copy of the relevant articles cited in this appendix to make sure that the basis and limitations of these equations are fully understood prior to design. It is also important to note that their conclusions have not yet been field-verified.

The bed material is placed so that a low-flow channel meanders down the center of the culvert. Channel side slopes should be approximately 6:1. The profile in high-gradient channels in the range of slopes normally encountered is step-pool (three to 10 percent).[29] The spacing of steps is somewhat variable, but one to four channel widths with a maximum, one-foot drop between successive crests is recommended.[30] The no-flow depth of the pools should be approximately 1.5 feet. The steepest channels (greater than 10 percent) are cascades with large roughness elements protruding into the channel with incomplete steps, often on alternating sides.

Bed Porosity

The gradation of the mix used for the bed inside roughened-channel culverts should have enough fine materials to seal the bed and provide the variety of particle sizes that are present in natural channels. The standard riprap gradation recommended by the U.S. Army Corps of Engineers[31] is $D_{85}/D_{15} < 2$. This is very permeable. It leads to subsurface flow during low-flow periods and does not create a very stream-like character. Even after years of seasoning, some culverts have experienced loss of surface flow into the bed. Specifying a well-graded mix reduces permeability but may reduce stability if the voids are overfilled and rock-to-rock contact is lost. The mix must be designed to limit the reduction of stability and the risk of failure.

There is an extensive discussion regarding well-graded sediment mixtures in Chapter 6. Refer to that chapter for the design of culvert fills for roughened channels.

Turbulence

In order to maintain a desired velocity, energy must be dissipated. The energy of water "falling" down the channel is dissipated by turbulence. Theoretically, a culvert slope and roughness could be continually increased so that the average velocity would meet fish-passage criteria; but, in that process, the intensity of the turbulence increases and becomes a barrier to fish passage. Turbulence in the culvert is characterized by the energy-dissipation-per-unit volume of water and is referred to as the energy-dissipation factor (EDF). It is unclear at this time what the specific numerical value for EDF should be for fish passage in roughened channels. This is one of reasons roughened channel culverts are considered experimental.

Based on a visual examination of existing, roughened-channel culverts, we recommend that EDF be equal or less than 7.0 foot-pounds per cubic foot per second (ft-lb/ft^3/sec). The recommended EDF for roughened-channel culverts is significantly greater than that recommended for baffled culverts (EDF 3 to 5) and fishways (EDF 4.0, pool volume criteria). This is because the diversity of the turbulence scale and flow patterns in a roughened channel provide more opportunities for low-turbulence zones for resting and passage. The value of 7.0 ft-lb/ft^3/sec is based on very little data, but it leads to practical design of roughened channel culverts under reasonable circumstances. EDFs calculated for a number of high-gradient, natural channels using the velocity equations above were all below 7.0. As research and experience broaden, this value may be modified.

The EDF is calculated by the following equation:

$$EDF = \gamma QS/A$$

Equation 11

Where:

EDF	=	Energy Dissipation Factor in ft-lb/ft^3/sec
γ	=	the unit weight of water (62.4 lbs. per cubic foot)
Q	=	the fish-passage design flow in cubic feet per second
S	=	the dimensionless slope of the culvert (ft/ft)
A	=	the cross-sectional flow area (without large roughness elements) at the fish-passage design flow in square feet.

Fish Rocks and Bed-Retention Sills

A specific style of roughened channels inside of culverts has been used in recent designs. These culverts are designed using the stability, velocity, turbulence and porosity considerations. Large boulders have then been embedded in a scattered pattern in the channel bed, and bed-retention sills have been installed in the bed. Boulders and sills that are added as safety factors for the fish-passage and stability design reflect designers' poor understanding of fish-passage and stability analyses of the engineered bed. The boulders provide holding areas for fish. The sills prevent the bed from scouring out of the culvert. This style is pictured in **Figure E-2.** This is by no means the only way to design roughened-channel culverts. This style is presented here simply as an example for which there is first-hand, scientific experience.

Figure E-2. Various predictions of bed-material size as a funcion of slope.

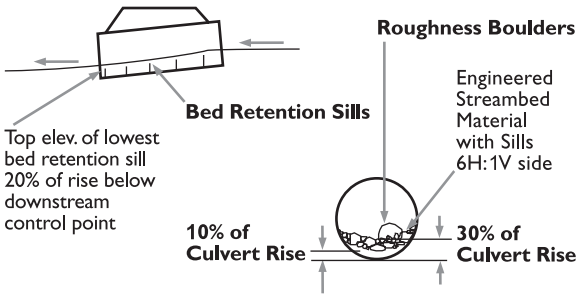

Roughened-channel culverts using fish rocks and bed-retention sills.

The bed material fills 30 percent of the culvert rise in the case of round or squashed pipes. For bottomless culverts, the bed elevation is 20 percent of the rise above the footings. The bed material is placed so that a low-flow channel meanders down the center of the culvert, with side slopes next to it approximately 6:1. Bed-retention sills may be placed at 10 percent of the culvert rise above the culvert invert. The crest of the sills should also have a minimum slope of 6:1. The sills are typically made of the same material as the culvert (e.g., steel, aluminum or concrete) and are attached to the culvert. The added boulders should occupy no more than a quarter of the channel cross section at any point in the culvert.

Referring to the profile, the lowest point of the bed at the outlet of the culvert must be at the elevation of the downstream control point. This ensures that the bed-retention sills are below the downstream control point and will not become exposed, creating an outfall drop. This control should be either a stable, natural bed feature or a permanent, constructed control placed at least 20 feet from the outlet.

Using this method in lower-gradient situations assumes that the bed material creates the dominant form of roughness, and the boulders placed on the bed act only to enhance the fish passage. It is clear that these boulders have some role in general resistance to flow, but it is not clear how to quantify this. Though we know that they act as constrictions or obstructions to flow, it will take additional studies to know whether bed roughness or constriction losses are the dominant roughness factor. To design conservatively for fish passage, we recommend not including the boulders in the velocity calculation.

Using the synthetic streambed distributions recommended in Chapter 6 for higher-gradient situations, the maximum-sized particles prescribed will act as boulders. In such cases, there may be no difference between the roughness boulders and the largest bed element.

The depth of flow at the fish-passage design flow should be less than or equal to two thirds of the exposed height of the boulder. Boulders should be embedded at least one third of their diameter. (The diameter of boulders is considered here to be roughly equal to the intermediate axis of the particle.) The result of applying these constraints to the boulder size and water depth leads to a boulder diameter that is roughly two times the water depth at the fish-passage design flow. A final requirement is that the size of boulders should not be greater than one quarter of the culvert span. This is to prevent the flow from being confined into a narrow, high-velocity jet between the boulder and the culvert wall or other boulders.

Other styles of roughened-channel culvert are possible, although untried. Eliminating the bed-retention sills will become more practical as we better understand the implications and limitations of culvert width and sediment sizing.

References

[1] Abt, S. R., R. J. Wittler, J. F. Ruff and M. S. Khattak, 1988. Resistance to Flow Over Riprap in Steep Channels. Water Resources Bulletin. American Water Resource Association. 24:6:1193-1200.

[2] Bathurst, J.C. 1978. Flow Resistance of Large-Scale Roughness. Journal of the Hydraulics Division. American Society of Civil Engineers. 104:HY12.

[3] Olsen, D. S., A. C. Whitaker and D. F. Potts. 1997. Assessing stream channel stability thresholds using flow competence estimates at bankfull stage. Journal of the American Water Resource Association. 33:6:1197-1207.

[4] Mussetter, R.A. 1989. Dynamics of mountain streams. Dissertation. Colorado State University, Fort Collins, CO.

[5] Wittler, R. and S. R. Abt. 1995. Shields parameter in low submergence or steep flows. River, Coastal and Shoreline Protection. Ed. C. R. Throne, et. al., John Wiley & Sons. pp. 93-101.

[6] Norman, J. M. 1975. Design of stable channels with fixable linings, Highway engineering circular No. 15. Federal Highway Administration, U.S. Department of Transportation, Washington. DC.

[7] Buffington, J. M. and D. R. Montgomery. 1997. A systematic analysis of eight decades of incipient motion studies, with special reference to gravel-bedded rivers. Water Resources research. 33:8:1993-2029.

[8] Maynord, S. T. 1994. Riprap design for category c streams. In Streams above the line: channel morphology and flood control. Proceedings of the U.S. Army Corps of Engineers workshop on steep streams, October, 1992, Seattle, WA. pp. 8-4 to 8-9.

[9] Peterka, A. J. 1958. Hydraulic design of stilling basins and energy dissipators. U.S. Bureau of Reclamation, Engineering Monograph No. 25.

[10] Blodgett, J. C. 1986. Rock riprap design for protection of stream channels near highway structures. U. S. Geological Survey Water-Resources Investigations Report 86-4127.

[11] Isbash, S. V. 1936. Construction of dams by depositing rock in running water. Transactions of the second congress on large dams. Vol. V:communication 3. U.S. Government Printing Office. Washington, DC.

[12] Vanoni, V. A. (ed). 1977. Sedimentation engineering. American Society of Civil Engineers Manuals and reports on engineering practice, No. 54.

[13] Jarrett, R. D. 1984. Hydraulics of high-gradient streams. Journal of Hydraulic Engineering. 110(11): 1519-1593.

[14] Buffington, J. M. and D. R. Montgomery. 1999. Effects of hydraulic roughness on surface textures of grave-bed rivers. Water Resources Research. 35:3507-3521.

[15] Marchand, J. P., R. D. Jarrette and L. L. Jones. 1984. Velocity profile, water-surface slope, and bed material size for selected streams in Colorado. U.S. Geological Survey, Open-File Report, 84-733. p. 82.

[16] Limerinos, J. T. 1970. Determination of the Manning coefficient from measured bed roughness in natural channels. U.S. Geological Survey Water-Supply Paper 1989-B.

[17] Costa, J. E., 1983. Paleohydraulic reconstruction of flash-flood peaks from boulder deposits in the Colorado Front Range. Geological Society of America bulletin. 94:986-1004.

[18] Grant, G. E., F. J. Swanson and M. G. Wolman, 1990. Pattern and origin of stepped-bed morphology in high-gradient streams, Western Cascades, Oregon, Geological Society of America, Bulletin. 102:340-352.

[19] Tinkler, K. J. 1997. Critical flow in rock-bed streams with estimated values for Manning's n. Geomophology. 20:147-164.

[20] Parker, G., P. C. Klingeman and D. G. McLean. 1982. Bedload and Size Distribution in Paved Gravel-Bed Streams. Journal of the Hydraulics Division. American Society of Civil Engineers. 108:HY4:544-571.

[21] Wiberg, P. L. and J. D. Smith, 1987a. Initial motion of coarse sediment in streams of high gradient. Erosion and Sedimentation in the Pacific Rim, Proceedings of the Corvallis Symposium, International Association of Hydrological Sciences. Publication 165. pp. 299-308.

[22] Wiberg, P. L. and J. D. Smith 1987b. Calculations of the critical shear stress for motion of uniform and heterogeneous sediments. Water Resources Research. 23(8), pp. 1471-1480.

[23] Nelson, J. M., W. W. Emmett and J. D. Smith. 1991. Flow and Sediment Transport in Rough Channels. Proceedings of the Fifth Federal Interagency Sedimentation Conference. Las Vegas, NV.

[24] Barnes, H. H. 1967. Roughness Characteristics of Natural Channels, U.S. Geological Survey Water-supply Paper 1849, U.S. Dept of the Interior.

[25] Hubbard, L. C. 1997. Flow Processes in Mountain Rivers. Doctoral thesis, University of London. p. 389 plus appendix.

[26] Davies, R. R. H. 1980. Bedform spacing and flow resistance. Journal of Hydraulic Engineering. American Society of Civil Engineers. 106(HY3), pp. 423-433.

[27] Davies, T. R. H. and A. J. Sutherland. 1980. Resistance to flow past deformable boundaries. Earth Surface Processes, 5. pp. 175-179.

[28] Davies, T. R. H. and A. J. Sutherland. 1983. Extremal Hypotheses for river behavior. Water Resources Research. 19, pp. 141-148.

[29] Montgomery, D. R. and J. M. Buffington. 1993. Channel classification, prediction of channel response, and assessment of channel condition. Washington State Department of Natural Resources, report TFW-SH10-93-002.

[30] Chin, A. 1999. The morphologic structure of step-pools in mountain streams. Elsevier Science B. V. Geomorphology, 27. p. 191.

[31] U.S. Army Corps of Engineers. 1994. Hydraulic Design of Flood Control Channels, June 30, 1994. EM 1110-2-1601.

Additional Resources

Hey, R. D. 1979. Flow Resistance in Gravel-Bed Rivers. Journal of the Hydraulics Division. American Society of Civil Engineers. 105:HY4:365-379.

Parker, G. 1990. Surface-based bedload transport relation for gravel rivers. Journal of Hydraulic Research. International Association of Hydraulic Engineering and Research. 28:4.

Thorne, C. R. and L. W. Zevenbergen. 1985. Estimating Mean Velocity in Mountain Rivers. Journal of Hydraulic Engineering. American Society of Civil Engineers. 111:4:612-624.

Appendix F – Summary Forms for Fish-Passage Design Data

The following forms demonstrate the process of designing fish passage for a specific culvert. The purpose of the forms is to document the final design of a culvert, help permit reviewers and funding entities verify compliance with fish-passage regulations and expedite permitting. Not all sections will apply to all culverts; chose the sections relevant to your culvert-design process.

There are two separate forms, one of which deals with culverts designed under the Stream-Simulation and No-Slope Design options. The other form deals exclusively with culverts designed under the Hydraulic Design Option. These forms should be submitted with project plans that show, at a minimum, project layout, channel and culvert profiles, details of unique features, care of water (erosion control, water diversion, etc.), and road-runoff treatment. Additional review information may be needed for specific situations. Data required on these forms are defined in this guideline and must be developed using acceptable methods, such as those described in the guideline. Refer to "Explanation of Forms Content" at the end of these forms for additional information.

Summary Form for Fish-Passage Design Data
No-Slope and Stream-Simulation Design Options

Project Identification:

Stream name: _____ **Date:** _____ **WRIA:** _____
Tributary to: _____ **Name of road crossing:** _____
Road owner: _____ **Designer:** _____
Contact (phone, email): _____

Brief Narrative of Project:

_____
_____
_____
_____
_____

Design Option Used **Stream Simulation** **No slope**

Description of Culvert

	Existing	Proposed
Shape:	_____	_____
Material:	_____	_____
Rise:	_____ ft	_____ ft
Span:	_____ ft	_____ ft
Upstream invert elevation:	_____	_____
Downstream invert elevation:	_____	_____
Length:	_____ ft	_____ ft
Slope:	_____ ft/ft	_____ ft/ft
Culvert countersink (upstream):	_____	_____
Culvert bed width (upstream):	_____ ft	_____ ft
Culvert countersink (downstream):	_____	_____
Culvert bed width (downstream):	_____ ft	_____ ft
Culvert skew angle to stream:	_____ deg	_____ deg
Slope ratio (channel slope/culvert-slope)	_____	_____
Height of road fill	_____ ft	_____ ft

Bed material within culvert (Natural or imported, D100, D84, D50 and D16, if available, or verbal characterization such as, "nine-inch-minus, well-graded river rock."):

_____

How is imported bed material designed for stability?

_____

Additional culvert information, other conditions or concerns:

_____
_____
_____

Fish

Species of fish likely to be present and any special passage requirements that the culvert must satisfy:

_____
_____

Hydrology

Estimated Low- and Peak-Flood Flows (cfs):

	Q_2	Q_{100}
Current watershed conditions		
Future watershed conditions		

Describe how flows were estimated and what the assumptions are for future conditions (necessary only for Stream-Simulation Design Option):

_____

_____

Upstream Channel Description

Elevation of streambed at upstream end of culvert: _____
Upstream channel slope: _____ft/ft
Channel-bed width (average of three measurements over a length of 20 channel widths or a minimum of 200 ft. Please see Appendix H) _____ft

Streambed material type and the basis of vertical control (wood- or rock-dominated):

_____

Streambed size distribution:
(other sizes for Stream-Simulation Method):

D_{100} _____
D_{84} _____
D_{50} _____
D_{16} _____

Is there evidence of a significant amount of bed-material transport? **Y** **N**

Is the channel in equilibrium (not aggrading or degrading)? **Y** **N**

Is there a significant amount of mobile, woody debris present? **Y** **N**

Provide proposed grade-control information. Include type, elevation and distance from culvert:

_____

_____

Structures in bed or channel that could be exposed or undermined by upstream channel regrade:

_____

_____

Additional upstream information, other conditions or concerns:

_____

_____

Downstream-Channel Description

Elevation of streambed at downstream control point: _____
Downstream channel slope: _____ ft/ft
Channel-bed width: _____ ft
Streambed material type: _____

Provide proposed grade-control information. Include type, elevation and distance from culvert:

Structures in bed or channel that could be affected by culvert design and installation:

Additional Information

Describe any existing or proposed structures or natural features that would be detrimental to fish passage, interfere with compliance with regulations or compromise habitat considerations. Examples of this may include trash racks, sediment basins, storm-water-control devices, existing upstream or downstream barrier culverts, or bedrock chutes.

Summary Form for Fish-Passage Design Data
Hydraulic Design Option

Project Identification:

Stream name: _____ **Date:** _____ **WRIA:** _____
Tributary to: _____ **Name of road crossing:** _____
Road owner: _____ **Designer:** _____
Contact (phone, email): _____

Brief Narrative of Project:

_____
_____
_____
_____
_____

Description of Culvert

	Existing	Proposed
Shape:	_____	_____
Material:	_____	_____
Corrugation Dimensions:		
Depth:	_____ (in.)	_____ (in.)
Spacing:	_____ (in.)	_____ (in.)
Size:		
Diameter:	_____ (ft)	_____ (ft)
Rise:	_____ (ft)	_____ (ft)
Span:	_____ (ft)	_____ (ft)
Culvert elevations:		
Elevation datum used:	_____	
Upstream invert elevation:	_____	_____
Downstream invert elevation:	_____	_____
Culvert length:	_____ (ft)	_____ (ft)
Slope:	_____ (ft/ft)	_____(ft/ft)
Culvert countersink (upstream):	_____	_____
Culvert bed width (upstream):	_____ (ft)	_____ (ft)
Culvert countersink (downstream):	_____	_____
Culvert bed width (downstream):	_____ (ft)	_____ (ft)
Skew angle to road:	_____ (deg)	_____ (deg)
Culvert angle to stream:	_____ (deg)	_____ (deg)
Roughness of culvert used in calculations: (Manning's n or other)	_____	_____
Road fill:		
Height of fill on upstream face:	_____ (ft)	_____ (ft)
Lowest elevation at top of fill:	_____	_____

Culvert treatment specifications:

Upstream-end treatment:

_____

Baffles:

_____

Streambed-retention sills:

_____

Streambed material within culvert:

_____

How is imported bed material designed for stability?

Additional culvert information, other conditions or concerns:

_____

Fish

Species of migratory fish designed for and migration timing:

	Present (Y / N)	**Timing Month(s)**
Adult chinook, coho, sockeye salmon or steelhead		
Adult pink or chum salmon		
Adult trout		
Juvenile salmon, steelhead or trout		

Source of information:

_____

Hydrology

Estimated Low- and Peak-Flood Flows (cfs)

	$Q7L_2$	**Q_2**	**Q_{100}**
Current watershed conditions			
Future watershed conditions			

Estimated fish-passage flows (cfs)

Species	**Adult chinook, coho, sockeye or steelhead**	**Adult pink or chum salmon**	**Adult trout**	**Juvenile salmon, steelhead or trout**
Current watershed (Qfp)				
Future watershed (Qfp)				

Describe how flows were estimated and what the assumptions are for future conditions:

_____

_____

Hydraulics

Maximum water velocity (fps) in culvert at fish-passage design flows (Qfp)

Species / Size	**Adult chinook, coho, sockeye or steelhead**	**Adult pink or chum salmon**	**Adult trout**	**Juvenile salmon, steelhead or trout**
Design velocity(current)				
Design velocity(future)				
Maximum velocity allowable				

Describe how velocity was calculated:

_____

_____

Water-Surface Elevations

Upstream of culvert
- Q_{100} _____
- Hw/D (Q_{100}) _____

Is the culvert located under an inlet or outlet control?
- (Q_{100}) _____
- Qfp (Current) _____
- Qfp (Future) _____

Downstream of culvert
- Q_7L_2 _____
- OHW _____
- Qfp (Current) _____
- Qfp (Future) _____

Describe how water-surface elevations were determined:

_____

_____

Upstream Channel Description

Elevation of streambed at upstream end of culvert: _____
Upstream channel slope: _____ (ft/ft)
Channel-bed width: _____ (ft)
Streambed material type: _____
Is there evidence of a significant amount of bed-material transport? (**Y / N**) _____
Is there a significant amount of mobile, woody debris present? (**Y / N**) _____

Provide proposed grade-control information. Include type, elevation and distance from culvert:

_____

_____

Structures in the bed or the channel that could be adversely exposed or undermined by upstream channel regrade:

_____

_____

Additional upstream information, other conditions or concerns:

_____

_____

Downstream Channel Description

Elevation of streambed at downstream end of culvert: _____
Elevation of streambed at downstream control point: _____
Downstream channel slope: _____ (ft/ft)
Channel-bed width: _____ (ft)
Streambed material type: _____
Manning's *n* for downstream channel: _____
Channel capacity: _____ (cfs)

Structures in the streambed or channel that could be adversely impacted by project:

_____

_____

Provide proposed grade-control information. Include type, elevation and distance from culvert.

_____

_____

Additional downstream channel information, other conditions or concerns:

_____

_____

_____

Explanation of Forms Content

The following are definitions, descriptions and standards for the data in the Culvert-Fish-Passage Data-Summary Forms:

Project Identification: Indicate the stream name, Water Resource Inventory Area (WRIA), body of water that the stream is tributary to, name of road that the culvert is located on, owner of the road, designer of the culvert improvement and contact information.

Brief Narrative of Project: Summarize the project with a problem/solution statement.

Design Option Used: Indicate design option selected for culvert (as defined in Chapter 4, *No-Slope Design Option;* Chapter 5, *Hydraulic Design Option* and Chapter 6, *Stream-Simulation Design Option*). The form for the Hydraulic Design Option is to be used exclusively for culverts designed using that method.

Description of Culvert:

Culvert Information

Shape: Indicate culvert shape (circular, rectangular, arch, elliptical, bottomless or other)

Material: Indicate culvert material (corrugated metal, concrete, smooth plastic or metal). *If corrugated, indicate corrugation dimensions for depth and spacing.*

Size:

Diameter: Indicate diameter for circular culverts.

Rise: Indicate the dimension from culvert, invert to crown.

Span: Indicate the maximum width of culvert.

Culvert Elevations:

Elevation datum used: Describe elevation datum used (assumed, MSL, or other).

Upstream invert elevation: Elevation of the lowest point on the inner surface of the culvert at the upstream end.

Downstream invert elevation: Elevation of the lowest point on the inner surface of the culvert at the downstream end.

Culvert Length: Indicate culvert length, including aprons if present.

Slope: Use standard survey methods to determine the horizontal length of the culvert, including aprons and the difference between its invert elevations. If slope varies within culvert, provide maximum. Describe the slope with surveyed profile.

Culvert Countersink: Indicate the culvert countersink at each end of the culvert (ratio of depth of burial to culvert rise as a percentage).

Culvert Bed Width: Indicate culvert width at the depth of countersink at each end of the culvert. If using a bare circular culvert, indicate width as zero.

Skew Angle to Road: Indicate the angle of the culvert to the road centerline.

Culvert Angle to Stream: Indicate the angle of the culvert to the approximate upstream channel centerline.

Roughness Used in Calculations: (Manning's *n* or other. If other, describe.) (Hydraulic Design Option form only): To determine a Manning's *n* value for the bed material, use appropriate sources that list the bed material, sound judgement based on experience or a roughness-element calculation based on lab data.

A weighted Manning's *n* value will be required for culverts with streambed material in order to account for each segment of the wetted perimeter. For example if the bed roughness is determined to be .040 for a 10-foot-wide bed, and the culvert wall is 0.012 for two feet of submerged wall on each side of the culvert, the combined Manning's *n* is 0.032. $[10 \times 0.040 + 2 \times 0.012 + 2 \times 0.012] / [10 + 2 + 2]=0.032$

Slope Ratio: The ratio of the proposed culvert bed slope to the upstream, water-surface slope. The upstream slope should be determined outside the hydraulic influence of the existing culvert.

Culvert Treatment Specifications (Hydraulic Design Option form only):

Upstream End Treatment: Indicate whether the upstream end is beveled, protruding, beveled at upstream face, has flared wing walls, etc.

Baffles: If baffles are present describe the type of material used, shape, height and spacing.

Streambed-Retention Sills: If streambed-retention sills are present, describe the type of material used, shape, height and spacing.

Road Fill:

Road Fill (No-Slope and Stream-Simulation Design options form): Measure height of material from top of culvert to top of fill.

Height of Fill on Upstream Face (Hydraulic Design Option form only): Measure height of material from top of culvert to top of fill.

Lowest Elevation at Top of Fill (Hydraulic Design Option form only): Indicate elevation of low point of fill. This is used to model overtopping events in standard culvert-analysis programs. Use appropriate sources to select a Manning's *n* value for culverts without bed material.

Streambed Material Within Culvert:
Indicate material to be used as streambed material from list below:

Bare: No material will be placed within culvert.

Natural Bed: Material that has similar gradation to existing streambed material to be placed in the culvert or channel section and expected to regrade and deposit existing streambed materials within the culvert.

Engineered Bed: Engineered materials to be placed within culvert. Describe the gradation of any imported bed material with D_{90}, D_{50} or D_{10}, and the placement of these materials. Is the material uniformly graded from fines to maximum size? Describe specification used.

How is imported Streambed Material Designed for Stability? Describe methods used to estimate scour and transport of streambed materials within the culvert and whether this is in keeping with the natural stream processes.

Additional Culvert Information, Other Conditions or Concerns: Describe any information not covered on the form that is relevant to the project.

Fish (No-Slope and Stream-Simulation Design options form): Species of fish likely to be present and any special passage requirements that the culvert design must satisfy. This section is for concerns about juvenile salmonid, nonsalmonid and other species such as amphibians and wildlife.

Fish (Hydraulic Design Option form):
Species of migratory fish designed for and the timing of their migration. Indicate fish species found in stream and the months they require upstream passage.

Source of Information: Indicate where you obtained the information about fish. Contact the Washington Department of Fish and Wildlife's Area Habitat Biologist for information on how to identify fish species (see Appendix J, *Washington Department of Fish and Wildlife Contact Information*).

Hydrology:

Estimated Low- and Peak-Flood Flows (cfs):
Enter information in the table for the seven-day, two-year low flow (Q_7L_2, required on the Hydraulic Design Option form only for culverts that do not have a natural bed), two-year peak-flood flows (Q_2) and 100-year, peak-flood flows (Q_{100}) in cubic feet per second for current and future (if available) watershed conditions. This information is used as a measure of watershed properties and culvert-capacity calculations for the No-Slope and Stream-Simulation Design options form and for standard culvert analysis on the Hydraulic Design Option form.

Estimated Fish-Passage Flows (cfs) (Hydraulic Design Option form only):
Enter information in the table for the fish-passage flows for each species present in cubic feet per second for current and future (if available) watershed conditions.

Describe how flows were estimated and what the assumptions are for future conditions: Provide information on how flood and fish-passage flows were obtained. Describe calculations, data sources, hydrologic models, monitoring efforts or predictions.

Hydraulics (Hydraulic Design Option form only):

Maximum water velocity (Q/A) in culvert at fish-passage design flows (Q_{fp}):
Enter information in the table for the fish-passage velocity for each species present in feet per second for current watershed conditions, future watershed conditions (if available) and the velocity allowable per WAC 220-110-070 (see Appendix B, *Washington Culvert Regulation*).

Describe how velocity was calculated: Indicate how velocities were derived. Describe calculations used (normal depth, backwater analysis, with or without bed-material deposition, etc.)

Water-Surface Elevations:

Upstream of Culvert: Provide water-surface elevations for 100-year-flood flows, including headwater-to-depth ratio (Hw/D), whether the culvert is under an inlet or outlet control), and current and future fish-passage flows at the upstream end of the culvert.

Downstream of Culvert: Provide water-surface elevations for minimum flows, ordinary high water, current and future fish-passage flows at the downstream end of the culvert.

Describe how water-surface elevations were determined: Provide information on how water-surface elevations were obtained and describe the calculations used.

Upstream Channel Description

Elevations and Upstream Channel Slope: Determine the channel elevation and slope by surveying the upstream and downstream channel for a total distance of at least forty channel widths or 400 feet.

Channel Elevation: The channel elevation in alluvial channels consists of an imaginary line that connects the bottom of alluvial pools. This estimate of channel elevation is based on the assumption that alluvial pools may migrate and pass through the culvert itself. In reality, alluvial pools are formed by alluvial processes, such as the accumulation of large debris or bedrock, which cannot form within the culvert.

Channel Slope: The calculation for average channel slope is based on water-surface elevations and a distance along the channel thalweg that is at least 40 channel widths long, or 400 feet. In a pool-riffle channel, measure the water-surface elevations at the upstream end of riffles (the place where a pool of water would form upstream if water ceased to flow in the channel) to determine the channel slope. Consistently measure the same point relative to each riffle. In step-pool channels, measure the elevation of the water surface at the top of each step. If there are no distinct channel forms, measure points at regular intervals about two channel widths apart. For slope calculations, do not measure points in pools or points that are exclusively controlled by debris or other unique features.

Channel-Bed Width: For the purpose of culvert design, the channel-bed width is defined as the width of the bankfull channel. The bankfull channel is defined as the stage when water just begins to overflow into the active floodplain. Bankfull width requires a floodplain or a bench to define itself, but such features are not present in many channels. In such cases, bankfull channel is instead determined using features that do not depend on a floodplain; features similar to those used in the description of active channel and ordinary high water (see the "ordinary high water mark" entry in Appendix A, *Glossary* and Appendix H, *Measuring Channel-Bed Width*).

For design, use the average of at least three typical widths in a freely alluvial reach of the stream or a reach that is characteristic of natural stream processes. Measure widths that describe normal conditions at straight channel sections between bends and outside the influence of any culvert or other artificial or unique channel constrictions. See Appendix H for more information.

Streambed-Material Type: Determine the size and type of streambed material present. Categorize it as clay, sand, gravel, cobbles, boulders, bedrock, etc.

Streambed Size Distribution (No-Slope and Stream-Simulation Design options form only): Such a distribution is the result of pebble count. If no count has been done, then at least measure the size of the largest particles in the bed. In step-pool channels, the average of the five largest rocks in the step is about the D_{84} or D_{90}.

Is there evidence of a significant amount of bed-material transport? Look for signs of disturbance, such as high bars or deposition of material. Examine the channel for sharp bends, lack of pools or long continuous riffles. Determine if the stream is regrading or becoming channelized due to either natural or human actions.

Is there a significant amount of mobile, woody debris present? Look for debris at the site and the potential for recruitment from the riparian zone. Estimate the size and amount of debris available for recruitment. Determine if it will move on the basis of stream stage and velocity. Debris movement will have to be taken into account when the height of the culvert is planned (four feet of clearance between the culvert bed and the crown is considered a minimum and, in debris-prone channels, more should be considered).

Proposed grade controls: Grade controls placed to control regrade should not be located closer than 35 feet from the culvert inlet; even farther away on larger streams. Indicate types (e.g., rock, log control) and their crest elevation, as well as the slope between successive crests.

Structures in bed or channel that could be adversely impacted by upstream channel regrade: Indicate items that could be impacted by upstream channel regrade such as pipes, intakes, weirs, bridge footings, log jams, reactivating landslides, other debris accumulations, etc.

Additional upstream information, other conditions or concerns:

Describe any information not covered on the form that is relevant to the project.

Downstream Channel Description:

Channel elevation of bed at downstream end of culvert: Indicate the channel elevation of the streambed at the downstream end of the culvert. The *downstream bed elevation*, used for culvert placement, is taken at a point downstream at least four times the average width of the stream but not more than 25 feet from the culvert. If thalweg elevations are higher further than that from the culvert, they are appropriate to use.

Elevation of bed at downstream control point: Indicate *streambed elevation at the downstream control point*. This is the point where the channel maintains a stable elevation outside the influence of the culvert outlet.

Downstream Channel Slope: Apply the same explanation as that used for upstream channel slope.

Channel-Bed Width: Apply the same explanation as that used for upstream channel-bed width.

Streambed-Material Type: Determine the size and type of *bed material* present. Categorize it as: clay, sand, gravel, cobbles, boulders, bedrock, etc.

Manning's n for Downstream Channel (Hydraulic Design Option form only): Selection of an appropriate value for Manning's *n* is important for accurately computed water surface profiles. The value of Manning's *n* is highly variable and depends upon a number of factors, including surface roughness, vegetation, channel irregularities, channel alignment, scour and deposition, obstructions, size and shape of the channel, stage and discharge, and suspended material and bedload.

In general, Manning's *n* values should be calibrated whenever observed water-surface profile information (gauged data, as well as high water marks) is available. When gauged data are not available, values of Manning's *n* computed for similar stream conditions or values obtained from experimental data should be used as guides in selecting n values. There are several references a user can access that show Manning's *n* values for typical channels.

Channel capacity (Hydraulic Design Option form only): Calculate the channel capacity to determine the flood-carrying capacity of the stream. Use open-channel flow calculations to determine if the stream will rise above its banks. If there is a potential for this, assess the impact to the project, road and adjacent land.

Streambed material type: Determine the size and type of bed material present. Categorize it as: clay, sand, gravel, cobbles, boulders, bedrock, etc.

Structures in streambed or channel that could be buried or impacted by project: List items such as culverts that could become plugged with regraded material, intakes, etc. Also, list natural features that could suffer if a significant increase in bed load occurs. Indicate the distance from the culvert and the elevation.

Proposed Grade Controls: Grade controls placed to control bed elevation should not be located closer than 20 feet from the culvert outlet, even farther away on larger streams. Indicate type (e.g., log control, rock, roughened channel, etc.) and their crest elevation, as well as the slope between successive crests.

Additional Information:

Describe any existing or proposed structures or natural features that would be detrimental to fish passage, interfere with compliance with regulations or compromise habitat considerations. Examples of this include trash racks, sediment basins, storm-water-control devices, existing upstream or downstream culverts, water-diversion structures, or bedrock chutes. This section gives designers the opportunity to describe features that may not appear on plan sheets or would not otherwise enter into the culvert design process but still have an impact on passage and natural stream processes.

Appendix G – Construction Unit Cost

Since 1991, the Washington Department of Fish and Wildlife has tracked fish-passage project costs relative to design parameters. This section summarizes those costs. The projects tracked were designed and constructed by department staff. The figures reported represent the cost of construction only. The costs have been inflated by three percent per year to produce 2003 costs. These costs should only be used for initial project-planning purposes to compare project types; site conditions will greatly affect actual project costs. Variables that significantly affect costs include site access, requirements to detour traffic, removal and end-hauling of road fill material and additional work required, such as grade control and road repair. The unit cost of culvert replacement may vary according to the length of the culvert, since an increase of length requires not only a longer pipe and excavation but also implies the need for removal, hauling and replacement of a higher fill and wider open cut.

In **Table G-1**, the term "drop" is the vertical distance measured from the downstream water surface to the water-surface elevation upstream of the project. For baffles, the drop calculation would be the upstream culvert invert elevation minus the downstream culvert invert elevation. For log controls and fishways, the drop calculation is the water-surface elevation upstream minus the elevation of the water surface in the channel just downstream of the downstream log control or fishway weir.

Table G-1. A unit-cost comparison for fish-passage construction projects.

Project Type	Units	Cost / Unit	Cost Per Foot of Drop	Number of Projects
Log Controls	Controls (number)	$9,100	$10,500	10
Concrete Fishway	Weirs (number)	$13,000	$16,000	12
Baffles	Baffles (number)	$470	$2000	6

Appendix H – Measuring Channel-Bed Width

Channel-bed width is a design parameter for the No-Slope and Stream-Simulation design options. Correctly identifying and measuring the channel width is fundamental to good culvert design.

Channel geometry represents current hydrologic and geologic conditions. Prolonged dry periods with low peak flows tend to narrow channels as vegetation progressively stabilizes the bed and banks. Measuring a channel width under these conditions tends to indicate a much narrower width than would be found under a wetter regime. Catastrophic floods and debris flows rip out equilibrium channels and completely obscure historical geometry.[1]

The climatic and geological cycles of an area create a history in the channel that is typically not well accounted for in measured channel geometry.[1] The life of a culvert is considered short when compared to these larger processes, but culvert sizing should take them into account nonetheless, at least in a conservative way that acknowledges uncertainty regarding the types of cycles that may take place within the culvert's lifespan.

Definition of Channel Width

At least three parameters are commonly used to describe channel width:

- active channel width,
- ordinary high water width, and
- bankfull width.

In western Washington, the actual, measured, channel width may not vary significantly among these parameters; in eastern Washington, variations can sometimes be found. The language used to describe them is often identical. These descriptions were developed for and apply primarily to alluvial channels, not bedrock or debris-controlled channels. If applied to the latter, be mindful that the outcomes regarding fish-passage and other ecological goals may not be successfully met.

The term "active channel" is a geomorphic expression describing a stream's recent and current discharges. Beyond the boundaries of the active channel, stream features are typically permanent and vegetated.[1] The upper limit of the active channel is defined by a break in the relatively steep bank slope of the active channel to a more gently slopping surface beyond the edge. This normally corresponds to the lower limit of perennial vegetation. Features inside the active channel are partially if not totally sculpted by the normal process of water and sediment discharge.[2]

The term, "ordinary high water line" is defined several places in state law (WAC 220-110-020) as:

> *"the mark on the shores of all waters that will be found by examining the bed and banks and ascertaining where the presence and action of waters are so common and usual and so long continued in ordinary years, as to mark upon the soil or vegetation a character distinct from that of the abutting upland; Provided, That in any area where the ordinary high water line cannot be found the ordinary high water line adjoining saltwater shall be the line of mean higher high water and the ordinary high water line adjoining freshwater shall be the elevation of the mean annual flood."*

Of course, this is the legal definition, which does not always serve design needs well. A more useful and thorough definition for design purposes can be found in Appendix A, *Glossary* (however, the legal definition prevails). The distance between ordinary high water marks on the bank is considered the ordinary high water width. It is very similar to active channel and the width used in the past for culvert design.

The "bankfull channel" is defined as the stage when water just begins to overflow into the active floodplain. In order for this definition to apply, of course, a floodplain or a bench is required – features often not found along western Washington tributary streams (though more frequently found east of the Cascade mountains).[3] Incised channels, for instance, do not have bank heights that relate to "bankfull" discharges and may never be overtopped.[4] C. C. Harrelson, et. al.,[5] use features to determine channel width that do not depend on a floodplain; features that are similar to those used in the description of active channel and ordinary high water:

- a change in vegetation (especially the lower limit of perennial species);
- a change in slope or topographic breaks along the bank;
- a change in the particle size of bank material, such as the boundary between coarse cobble or gravel with fine-grained sand or silt;
- undercuts in the bank, which usually reach an interior elevation slightly below the bankfull stage;
- the height of depositional features, especially the top of the point bar, which defines the lowest possible level for bankfull stage; and/or
- stain lines or the lower extent of lichens on boulders.

Using a combination of indicators at a variety of locations improves the estimation of the channel width, since stream anomalies may mask or accentuate a given mark on the bank. As an example, perennial vegetation may grow lower on the bank during the dry period, not only lowering that indicator but forcing the channel into a more constricted reach. A short distance downstream from this location, the upper-story canopy may be denser, limiting understory growth on the streambanks and negating the effect.

For culvert design, the designer should use these indicators to determine channel width, unless there are legitimate reasons not to use these methods. One such case is alluvial channels in lower-gradient reaches. These channels have more traditionally defined bankfull-width indicators[6] and should be used instead. The floodplain is the relatively flat area adjoining the channel, and the bankfull width is the horizontal distance from the break between channel and floodplain on one side of the channel to the other side of the channel. Floodplains may be discontinuous, or may occur on only one side, so measurements must be taken at appropriate locations. The indicators listed above also apply to alluvial channels and provide additional indicators for identifying bankfull width in alluvial channels.[3,7]

Where to Measure Channel Width

Theoretically, the average of a large enough number of random width measurements will yield an average stream width. This is particularly true in alluvial streams where the bed and banks are freely modified by stream flow. Many streams in eastern Washington are like this, but very few tributaries in western Washington are. The correct location to measure channel width in the profile and planform is a matter of judgment. Some of the concerns to be address are as follows:[2,8]

- Where the channel has been realigned or modified by construction activity or in reaches lined with riprap, channel width will not be indicative of natural conditions. Usually these cross sections will be substantially narrower.
- Avoid reaches with cemented sediments, hard clay or bedrock.
- Large pools downstream of culverts or confined steep sections will be wider than channel width.
- Braided sections will indicate a wider width than single-thread reaches on the same stream (although, if the culvert is located in a naturally braided section, culvert sizing should reflect conditions).
- Avoid unusually shaped cross sections and sharp bends.
- Areas of active bank cutting, degradation or deposition may indicate that width is in the process of changing, in which case, conservative culvert sizing is recommended.
- Areas with natural or man-made log sills or channel-modifying logjams will affect width. These can be very common in forested, western Washington streams. Width measurements should be taken between such structures, but be sure to avoid backwater effects.
- Side channels, especially those that go undetected and act only at high flow, narrow the measured channel width.
- Active and remnant beaver dams obscure flow-generated channel processes.
- Dense vegetation and small woody debris in the channel increase the channel width and fragment the flow.
- Know the recent flood or drought history of the area to avoid misleading indicators.

Incised channels are problematic. Incised channels in cohesive materials may have a measured width only a fraction of what it would be if it was connected to a floodplain. In order to make sure that the culvert fill is stable and passage conditions in the culvert are good, culvert width must be greater than the width of this type of incised channel. On the other hand, streams incised into granular soils – Rosgen's type F[8] – may be wider than the equivalent type C. It is not recommended that culvert sizes be reduced in this instance, except with appropriate site analysis, since it is rarely clear what the appropriate measured width should be.

References

[1] Hedman, E. R. and W. M. Kastner. 1977. Streamflow characteristics related to channel geometry in the Missouri river basin. Journal of Research. U.S. Geological Survey. 5:3:285-300.

[2] Hedman, E. R. and W. R. Osterkamp. 1982. Streamflow Characteristics relating to channel geometry of streams in western United States. U.S. Geological Survey Water-supply Paper 2193. p. 17.

[3] Pleus, A. E. and D. Schuett-Hames. 1998. Method manual for the reference point survey. Prepared for the Washington State Department of Natural Resources under the Timber, Fish and Wildlife Agreement. TFW-AM9-98-002. DNR #102. May.

[4] Williams, G. P. 1978. Bankfull discharge of rivers. Water Resources Research. 14:6:1141-1154.

[5] Harrelson, C. C., C. L. Rawlins and J. J. Potyondy. 1994. Stream channel reference sites: an illustrated guide to field technique. General Technical Report RM-245. Fort Collins, CO. U.S. Dept of Agriculture, U.S. Forest Service, Rocky Mountain Forest and Range Experiment Station. p. 61.

[6] Rosgen, D. L. 1994. A classification of natural rivers. Catena 22, pp. 169-199.

[7] Dunne, T. and L. B. Leopold. 1978. Water in environmental planning. W.H. Freeman and Co. p. 818.

[8] Rosgen, D. L. 1996. Applied river morphology. Western Hydrology. Lakewood, CO.

Appendix I – Sample Design Sketches

Figure I-1. Elevation and Plan View: Log Control (NTS)

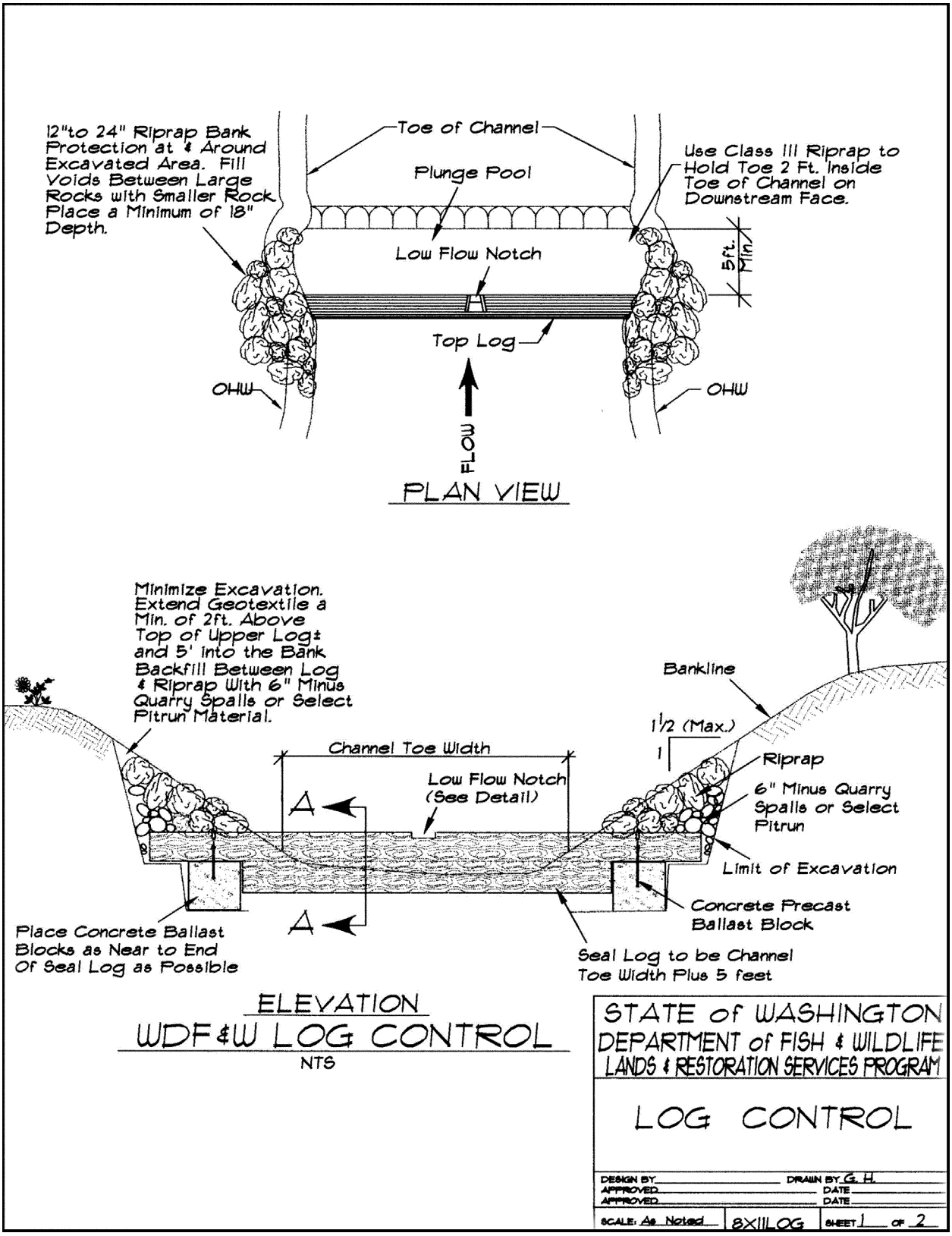

Figure I-2. Low Flow Notch Details: Log Control

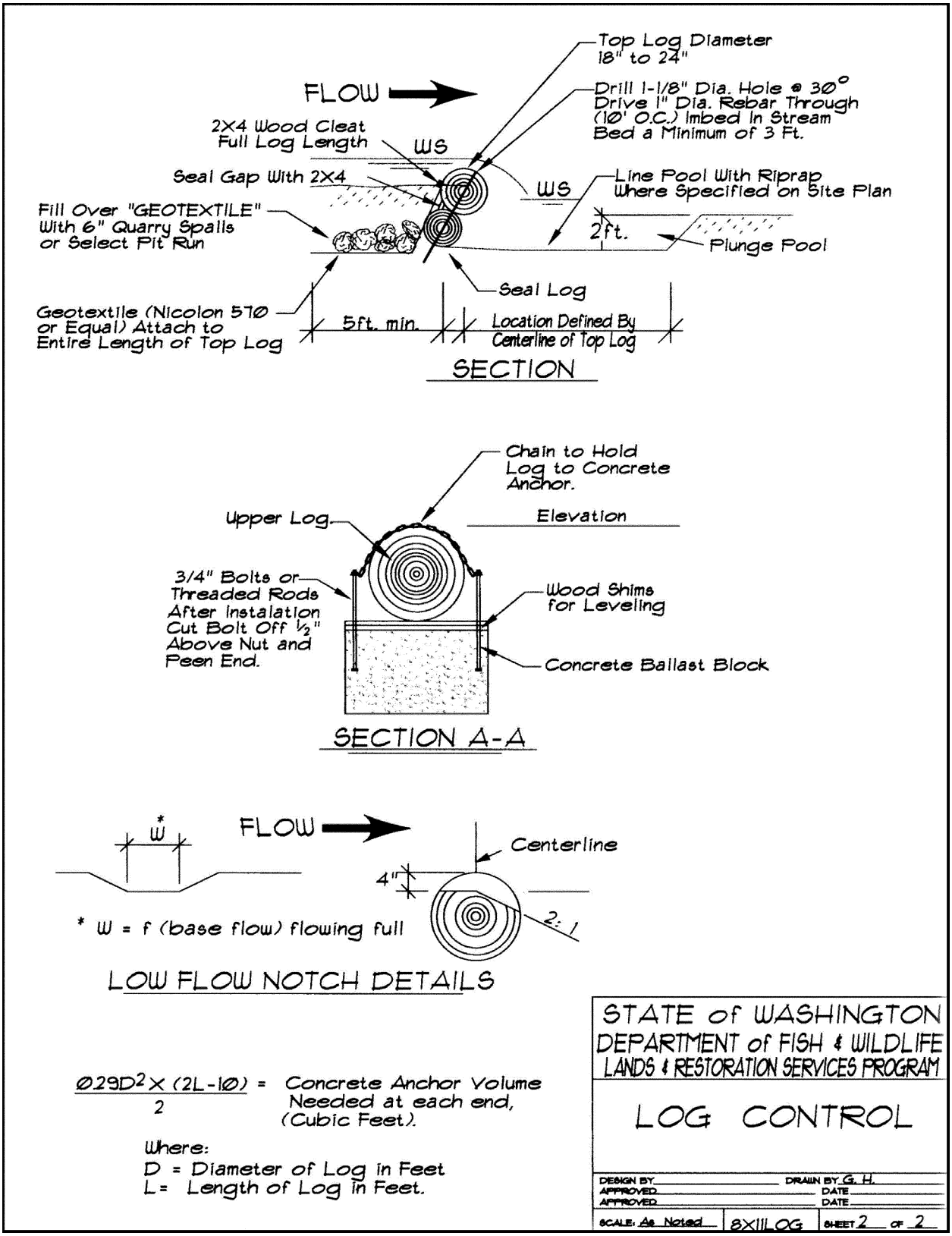

$$\frac{0.29D^2 \times (2L-10)}{2} = \text{Concrete Anchor Volume Needed at each end, (Cubic Feet).}$$

Where:
D = Diameter of Log in Feet
L = Length of Log in Feet.

Figure I-3. Elevation, Plan, Section: Plank Control

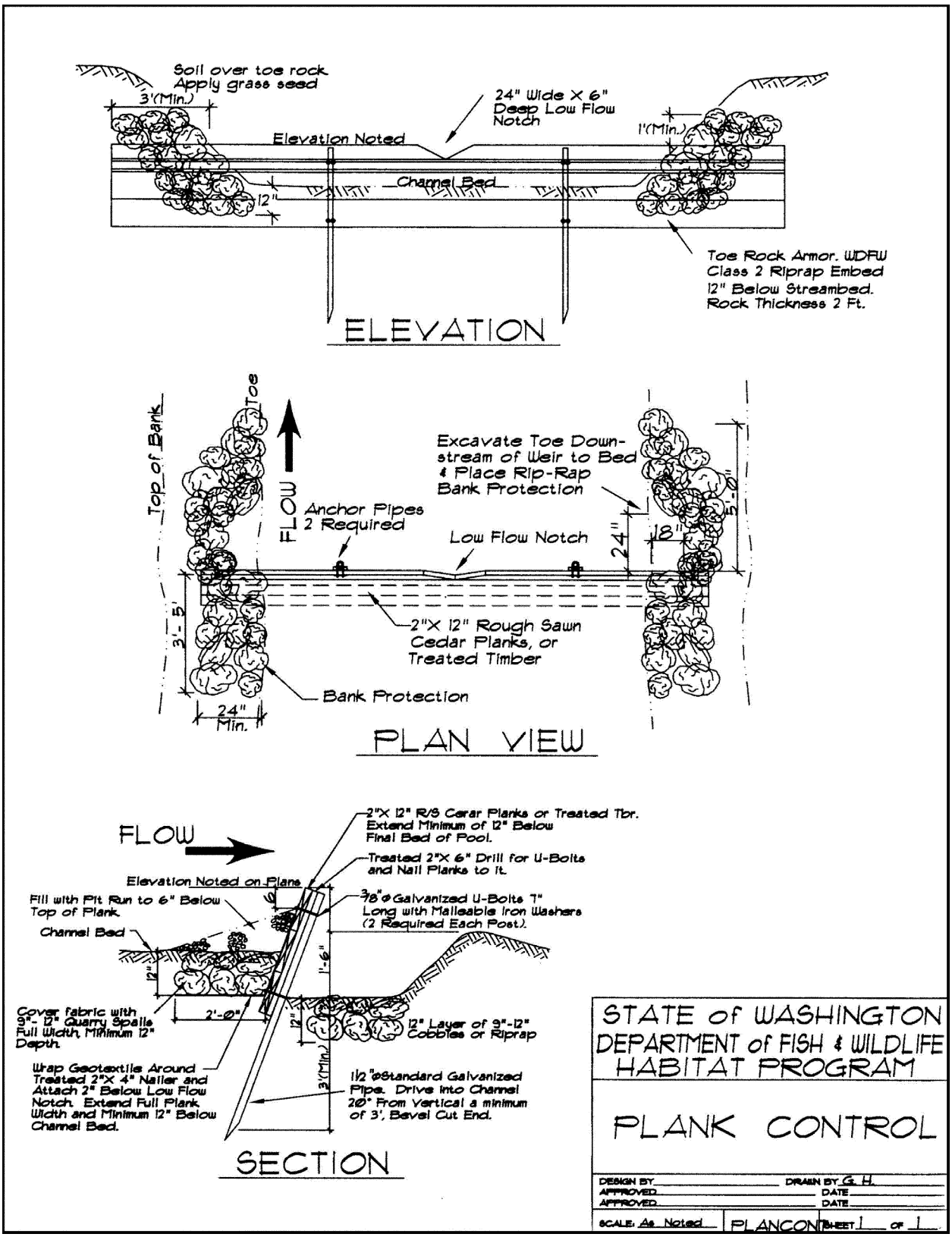

Figure I-4. Sloping Baffle: Circular Culverts

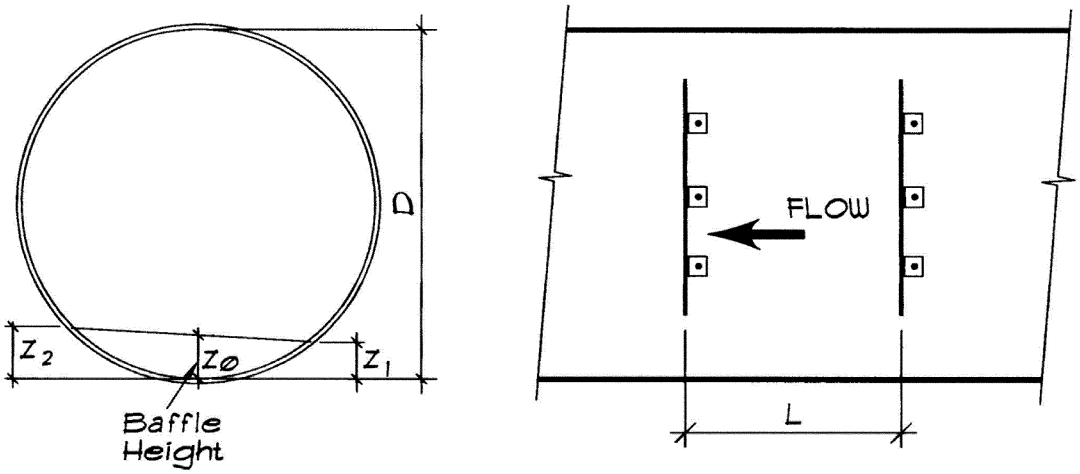

NOTE:

Attachment method shown is for concrete pipes. For corrugated pipes use expansion ring as shown in seperate detail. Expansion rings may be used in pipe arches.

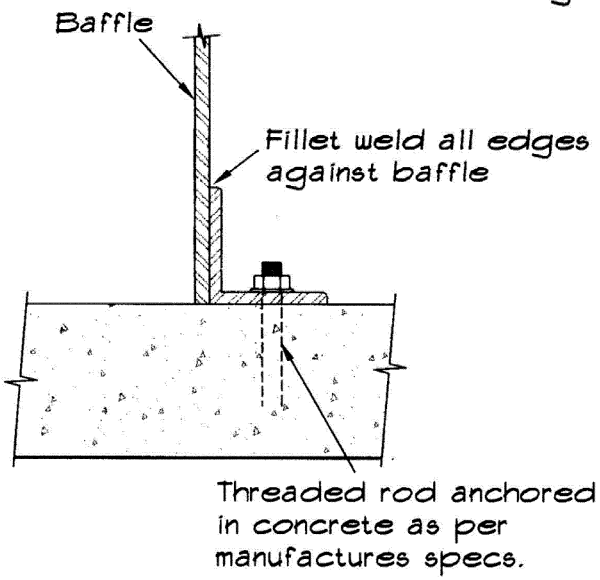

BAFFLE HEIGHT Zø	Z_1	Z_2
6"	3"	9"
9"	6"	12"
12"	9"	15"

STATE of WASHINGTON
DEPARTMENT of FISH & WILDLIFE
ENVIRONMENTAL ENGINEERING SERVICES

SLOPING BAFFLE
CIRCULAR CULVERTS

DESIGN BY P. Powers DRAWN BY G. H.
REVIEWED BY DATE 09/98
APPROVED DATE
SCALE: As Noted | S-BAFFLE | SHEET 1 OF 1

Figure I-5. Steel Baffle Section - Sloping / Angled Baffles: Box Culverts

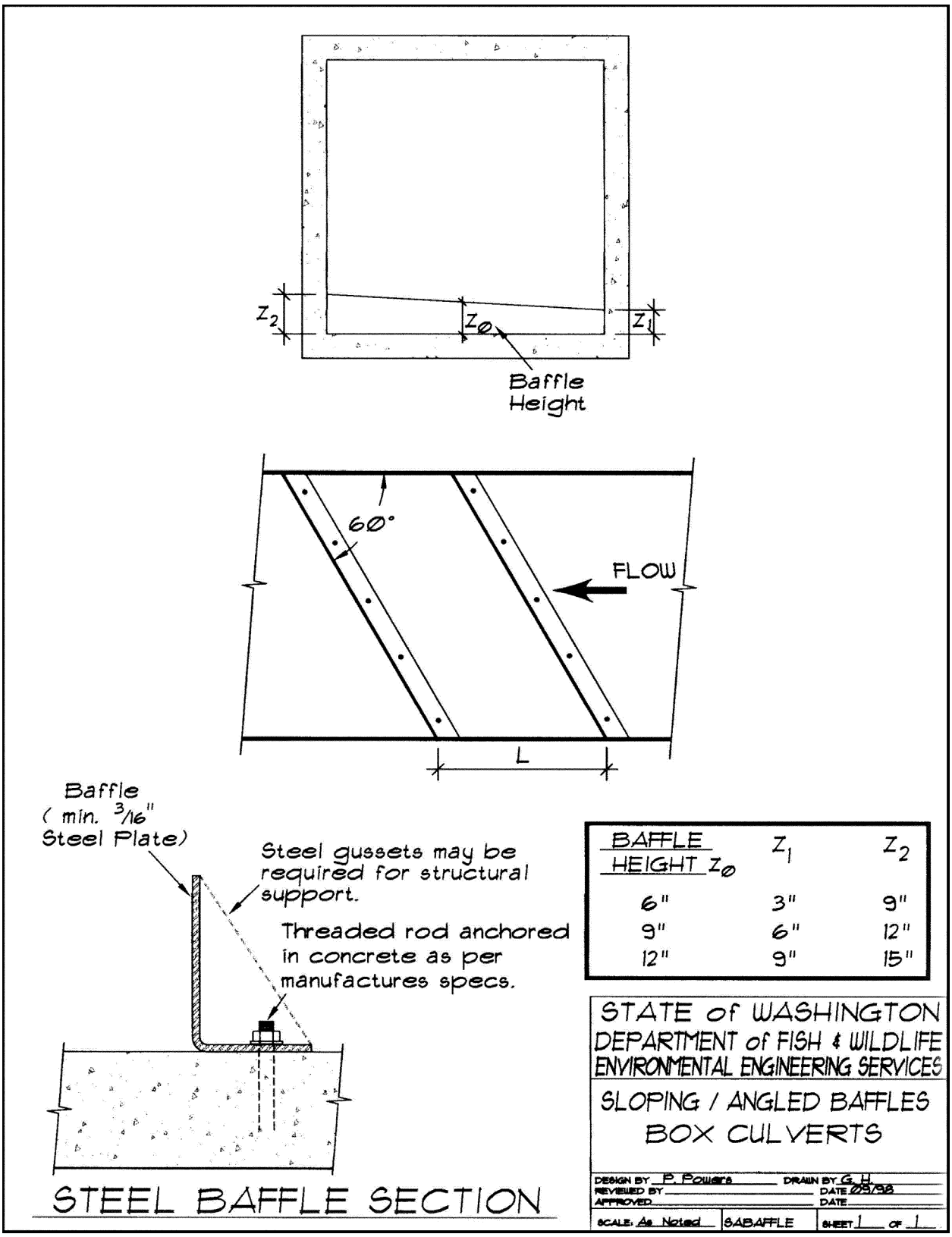

BAFFLE HEIGHT Z_0	Z_1	Z_2
6"	3"	9"
9"	6"	12"
12"	9"	15"

Figure I-6. Elevation, Plan, Section - Sloping Baffle: Expansion Ring

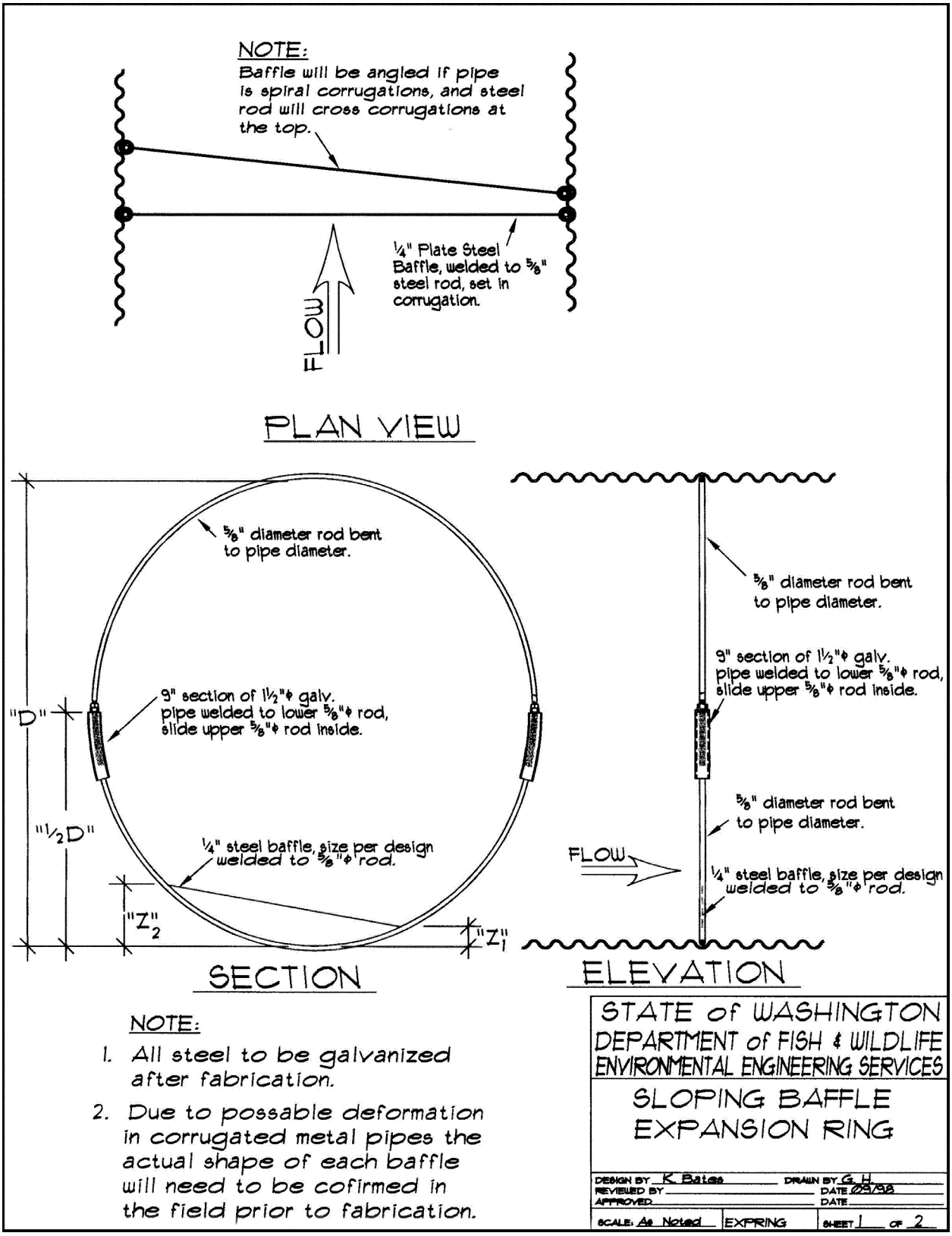

Figure I-7. Pipe Connection - Culvert / Sloping Baffle: Expansion Ring

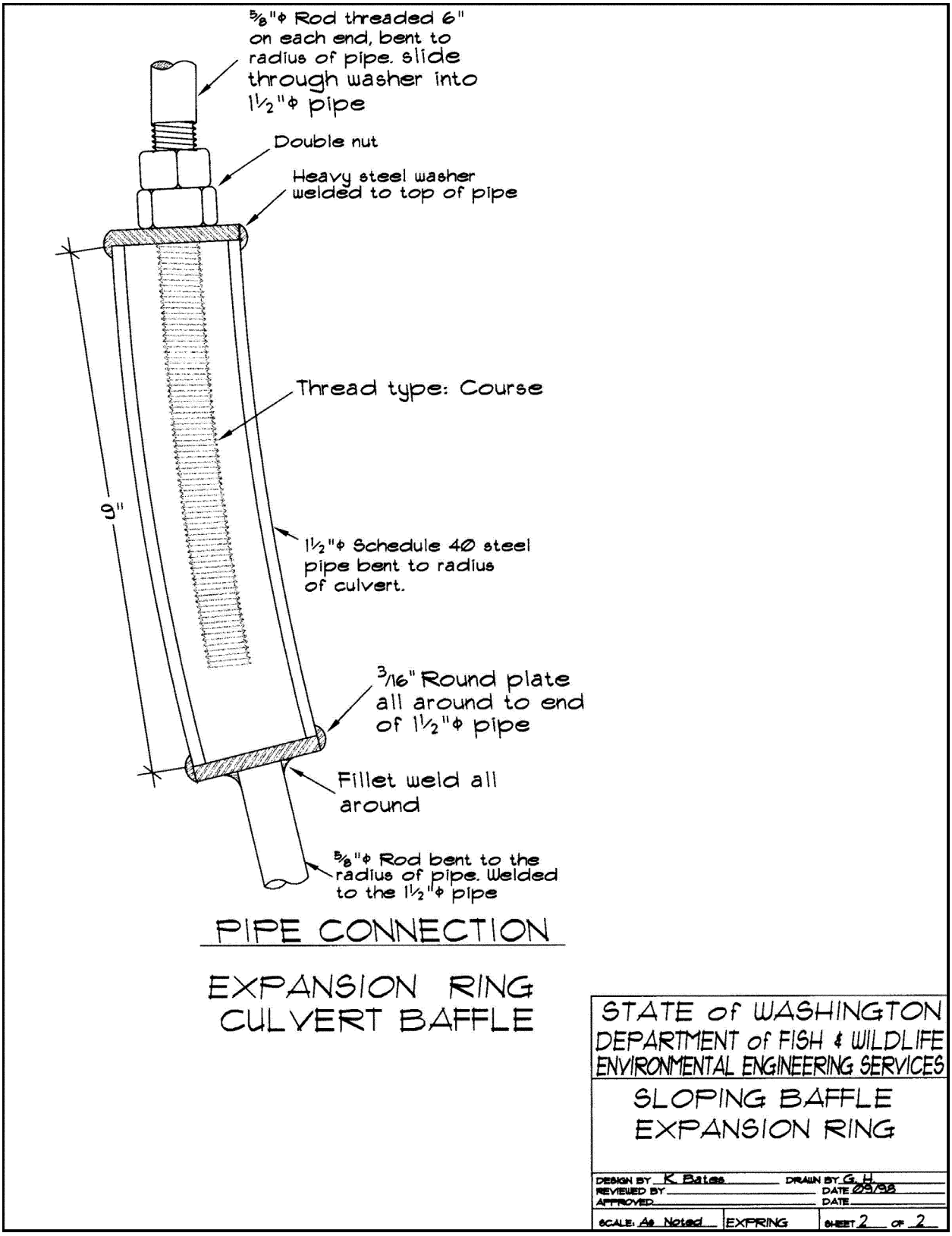

Appendix J – Washington Department of Fish and Wildlife Contact Information

Figure J-1. Washington Department of Fish and WIldlide Contact Information

Region 1
North 8702 Division Street
Spokane, WA 99218-1199
(509) 456-4082

Region 2
1150 Alder Street NW
Ephrata, WA 98823-9651
(509) 754-4624

Region 3
1701 South 24th Avenue
Yakima, WA 98902-5720
(509) 457-9317

Region 4
16018 Mill Creek Boulevard
Mill Creek, WA 98012
(425) 775-1311

Region 5
2108 SE Grand Boulevard
Vancouver, WA 98661
(360) 906-6700

Region 6
48 Devonshire Road
Montesano, WA 98563-9618
(360) 249-4628